HiFi ENGINE®

For more Hi-Fi manuals and set-up information
please visit www.hifiengine.com

Nakamichi

Service Manual

Nakamichi
BX-1

2 Head Cassette Deck

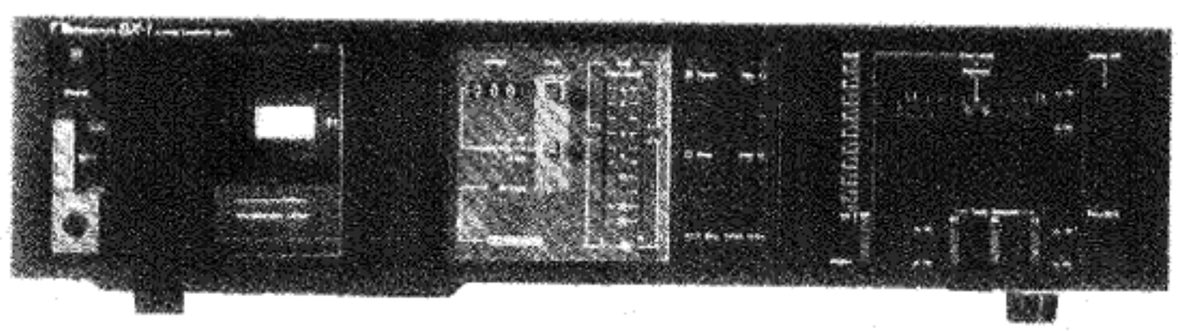

CONTENTS

1. General 1
2. Mechanical Adjustments 2
   2. 1. Tape Guide Height Check for Record/Playback Head and Erase Head 2
   2. 2. Head Base Stroke Check 2
   2. 3. Record/Playback Azimuth Alignment and Height Check 2
   2. 4. Pressure Adjustment of Pressure Roller 2
   2. 5. Tape Travelling Check 2
   2. 6. Eject Damper Adjustment 2
   2. 7. Reel Motor Speed Adjustment in Play Mode 3
   2. 8. Tape Speed Adjustment 3
   2. 9. Lubrication 3
3. Parts Location for Electrical Adjustment 3
4. Electrical Adjustments and Measurements 4
   4. 1. Adjustment and Measurement Instructions 4
   4. 2. Dolby NR Circuit Check 6
5. Mechanism Ass'y and Parts List 7
   5. 1. Synthesis 7
   5. 2. Synthesis Mechanism Ass'y (A01) 9
   5. 3. Mechanism Ass'y (B01) 11
6. Mounting Diagrams and Parts List 13
   6. 1. Power Switch P.C.B. Ass'y 13
   6. 2. Pin Jack P.C.B. Ass'y 13
   6. 3. Volume P.C.B. Ass'y 14
   6. 4. Dolby NR Switch P.C.B. Ass'y 14
   6. 5. MPX P.C.B. Ass'y 14
   6. 6. Timer Switch P.C.B. Ass'y 14
   6. 7. Memory Switch P.C.B. Ass'y 14
   6. 8. Control Switch P.C.B. Ass'y 14
   6. 9. Shut-off P.C.B. Ass'y 14
   6. 10. Main P.C.B. Ass'y 16
7. Schematic Diagram 17
   7. 1. Schematic Diagram 17
   7. 2. Attention to Servicemen 18
   7. 3. IC Block Diagrams 18
8. Wiring Diagram 20
9. Timing Chart and Eq. Amp. Frequency Response 21
10. Block Diagrams 23
11. Specifications 25

1. GENERAL

1.1. Voltage Selector

Voltage selector is installed on the rear panel for Other version of the Nakamichi BX-1.
This voltage selector can select either 120 V or 220-240 V at customer's disposal.

1.2. Parts List for Carton and Packing

Part No.	Description	Q'ty
0F03681C	Carton	1
0F03674A	Packing	2

1.3. Serial Number

The BX-1 has two versions, Silver and Black.
In the service manual, serial numbers of these versions are identified as follows:

Silver Version: A314xxxxx
Black Version: A315xxxxx

However, the actual serial number on the serial number plate of the BX-1 is indicated as A314.5xxxxx.
The serial number begins with A314.501001.

2. MECHANICAL ADJUSTMENTS

2.1. Tape Guide Height Check for Record/Playback Head and Erase Head

With use of an M-300 produced by Information Terminals, tape guide height check for the Record/Playback and Erase Heads shall be made, wherein a small block shall be pushed straight down to the base while in use of the M-300. Refer to Fig. 2.1.

(1) **Record/Playback Head Tape Guide Height**

(a) Load the base of the M-300 carefully, then set the cassette deck in Play mode.

(b) Place the small block of the M-300 on the base.

(c) Slide the small block against the tape guide of the Record/Playback Head, and check to insure that the block is accepted by the tape guide.

(d) If not, loosen the screw and insert a shim (either 30 μm (0C80048A), 60 μm (0C80038A), or 100 μm (0C80039A)) to raise the Record/Playback Head, then tighten and apply a quantity of lock tight paint to the screw.

(2) **Erase Head Tape Guide Height**

(a) Load the base of the M-300 carefully, then set the cassette deck in Play mode.

(b) Place the small block of the M-300 on the base.

(c) Slide the small block against the tape guide of the Erase Head, and check whether the block is accepted by the tape guide.

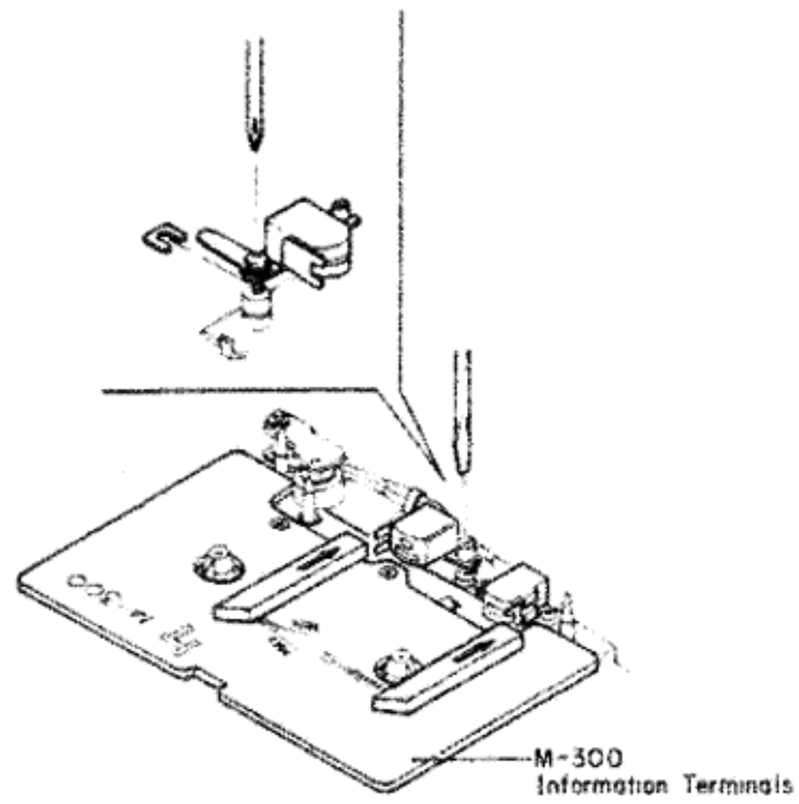

Fig. 2.1

2.2. Head Base Stroke Check

Refer to Fig. 2.2.

(1) Load the base of the M-300 carefully, then push the base toward the Record/Playback Head to eliminate the clearance between the reference pin and the base.

(2) Set the cassette deck in Play mode.

(3) Place the small block of the M-300 on the base.

(4) Contact the small block with the Record/Playback Head surface and the Erase Head surface, and check whether the end of the small block is located within the specified tolerance as shown in the figure.

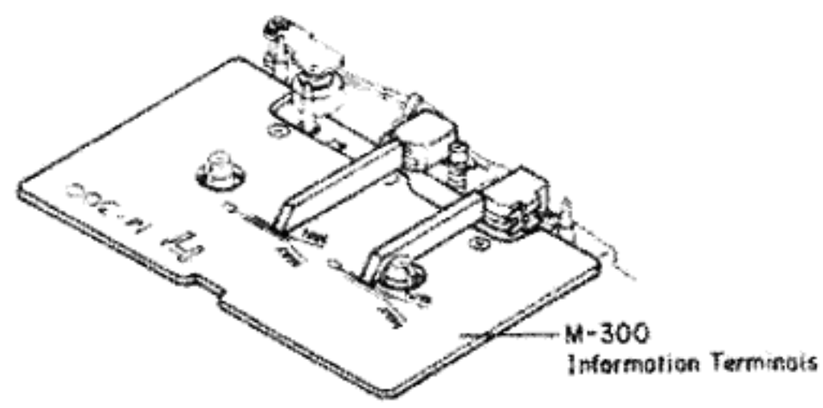

Fig. 2.2

2.3. Record/Playback Azimuth Alignment and Height Check

Refer to Fig. 2.1.

(1) Connect a VTVM to the Output Jacks.

(2) Load a 15 kHz Azimuth Tape (DA09004A), then set the cassette deck in Play mode.

(3) Turn the Azimuth Alignment Screw until the outputs of both channels become maximum.

(4) Load a 1 kHz Track Alignment Tape (DA09007A), then set the cassette deck in Play mode.

(5) Check to insure that the readings of both channels on the VTVM are below −25 dB.
If not, replacement of the Record/Playback Head will be required.

(6) Apply a quantity of lock tight paint to the Azimuth Alignment Screw.

2.4. Pressure Adjustment of Pressure Roller

Refer to Fig. 2.3.

(1) In Play mode, measure the torque of the Pressure Roller and check whether the torque is in a range of 320 ±50 g-cm.

(2) If torque is out of the range, correct it by changing the installation point of the Pressure Roller Spring.

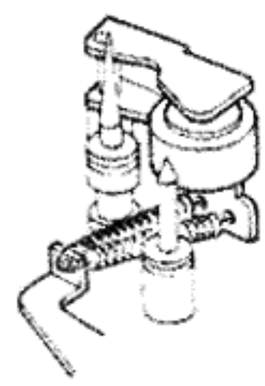

Fig. 2.3

2.5. Tape Travelling Check

Load the Tape Travelling Cassette (DA09027A), then set the cassette deck in Play mode and check the following:

(1) After more than 2 seconds, the fluctuation of the tape travelling on the Record/Playback Head is small.

(2) Tape is in contact with the head sufficiently.

(3) Tape waving is small on the heads and pressure roller.

2.6. Eject Damper Adjustment

Refer to Fig. 2.4. Load a cassette tape, and with opening the Cassette Case by pressing the Eject button and closing it by hand, adjust the speed of damper movement by the Adjustment Screw.

CCW: Damper moves fast.
CW: Damper moves slowly.

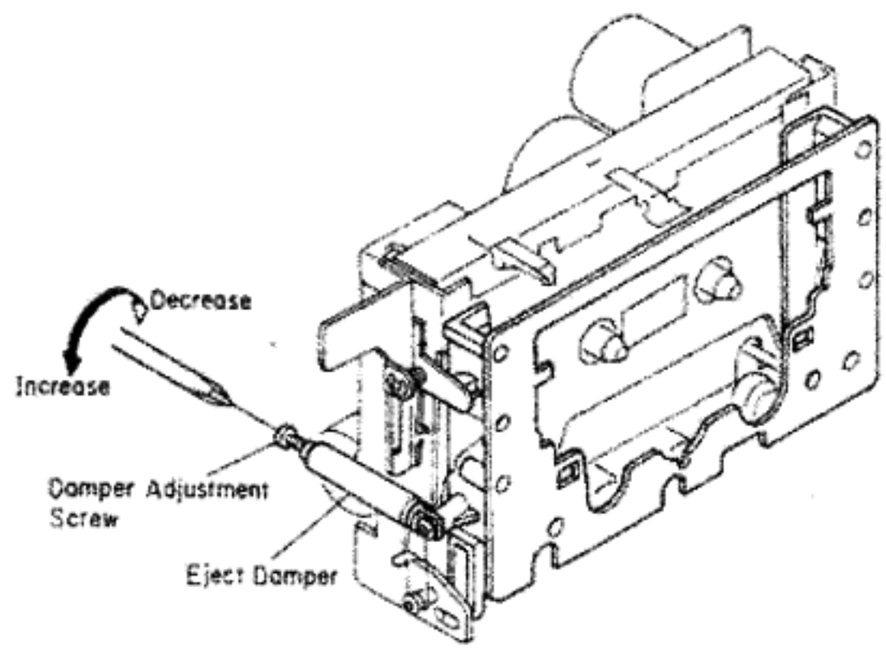

Fig. 2.4

2.7. Reel Motor Speed Adjustment in Play Mode

(1) Connect a DC Voltmeter across the Reel Motor terminals.
(2) Load a C-60 cassette tape, then set the cassette deck in Play mode.
(3) Adjust VR601 on the Main P.C.B. Ass'y to obtain approx. 3 V on the DC Voltmeter at the beginning of the tape.
(4) Load a Torque Meter TW-2111 (made by Sony) and check that the torque is 50 ±10 g-cm.

2.8. Tape Speed Adjustment

Refer to Fig. 2.5.

(1) Connect a frequency counter to the Output Jacks.
(2) Load a 3 kHz Speed and Wow/Flutter Tape (DA09006B) and Play it back.
(3) Adjust the Tape Speed Adjustment Volume incorporated in the Capstan Motor to obtain 3,000 Hz on the frequency counter.
    CCW: Motor drives slowly.
    CW: Motor drives fast.

2.9. Lubrication

The tape transport is of a lubrication-free type mechanism. When the following parts are replaced, apply the specified lubricant.

(1) Molykote® Grease (X5-6020)
    Cam Motor Pulley
    Thrust portion on the Capstan Shaft
(2) FLOIL GB-TS-1
    Washer between Reel Hub Ass'y and Back Tension Spring
(3) Diamond Oil (EP56)
    Reel Hub Shaft
(4) Anderol 456
    Capstan Shaft

Note: We suggest that you use the above specified lubricant or equivalent type.
The company dealing in the above lubricant is as follows:

(a) Molykote® Grease (X5-6020)
    Dowcorning Co., Ltd., 1-15-1 Nishishinbashi, Minato-ku, Tokyo, Japan
(b) FLOIL GB-TS-1
    Kanto Chemicals Co., Ltd., 2-7 Kanda Sakuma-cho, Chiyoda-ku, Tokyo, Japan
(c) Diamond Oil (EP-56)
    Mitsubishi Oil Co., Ltd., 1-2-4 Toranomon, Minato-ku, Tokyo, Japan
(d) Anderol 456
    Toyo Kokusai Oil Co., Ltd., 3-3-5 Hatchobori, Chuo-ku, Tokyo, Japan

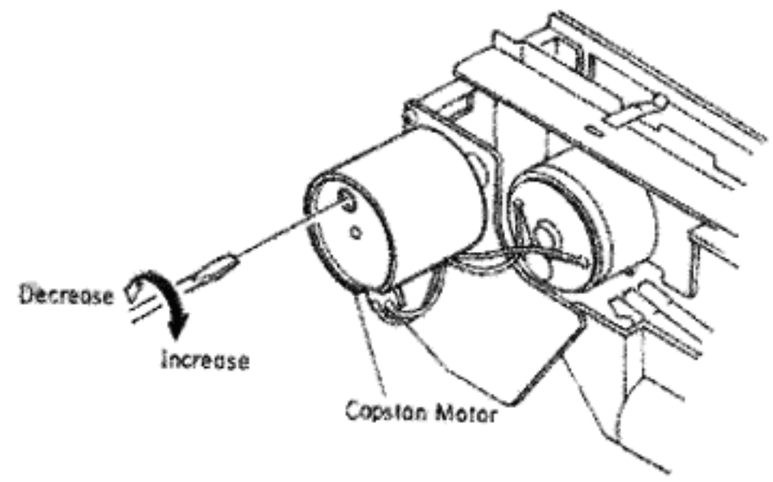

Fig. 2.5

3. PARTS LOCATION FOR ELECTRICAL ADJUSTMENT

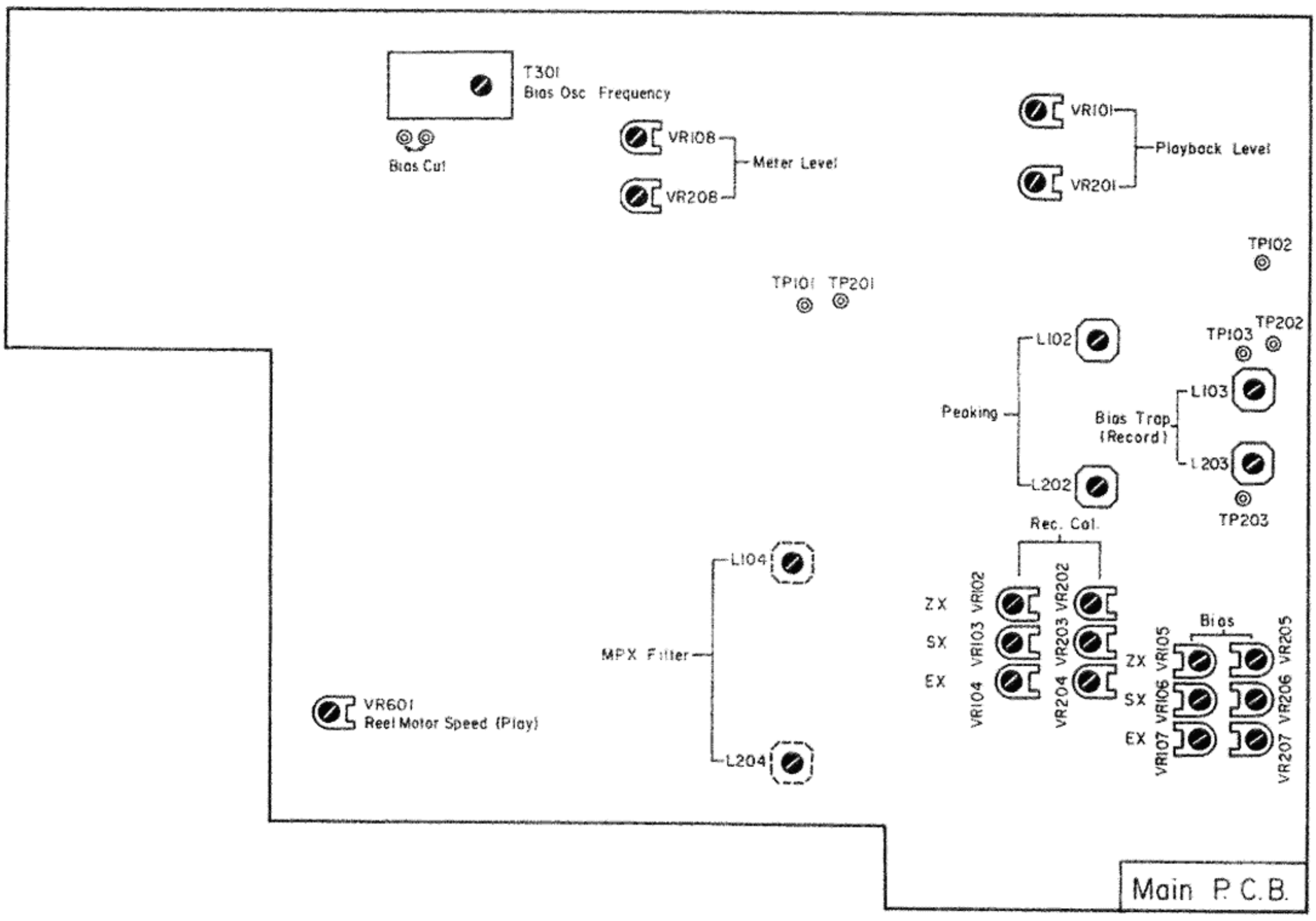

Fig. 3

4. ELECTRICAL ADJUSTMENTS AND MEASUREMENTS

Note: Electrical adjustment should be performed after mechanical adjustment is completed.

4.1. Adjustment and Measurement Instructions

STEP	ITEM	SIGNAL SOURCE	OUTPUT CONNECTION	MODE	ADJUST-MENT	REMARKS
1	Tape Speed Adjustment	3 kHz Speed and Wow/Flutter Tape (DA09006B)	Frequency Counter to Output Jacks	Playback Eq. SW — 70 μs	Tape Speed Adjustment Volume	Adjust the volume incorporated in the capstan motor to obtain 3 kHz ±0.5% on the frequency counter.
2	Meter Level Calibration	400 Hz to Input Jacks	VTVM to TP101, TP201 on Main P.C.B.	Record, Pause	Main P.C.B. VR108,VR208	1. Feed in 400 Hz, then adjust the Input Level control to obtain 90 mV —0.9 dB on the VTVM. 2. Adjust VR108 (VR208) so that the 0 dB segment of the level meter starts illuminating. 3. Adjust the Input Level control to obtain 90 mV on the VTVM, then decrease the generator output level by 20 dB. 4. Check to insure that the segment for —20 dB illuminates.
3	MPX Filter Adjustment	400 Hz and 19 kHz ±100 Hz to Input Jacks	VTVM to Output Jacks	Record, Pause	Main P.C.B. L104,L204	1. Feed in 400 Hz and adjust the Input Level control to obtain 0 dB (500 mV) on the VTVM. 2. Feed in 19 kHz, then adjust L104 (L204) to obtain minimum reading on the VTVM (minimum reading will be less than —30 dB).
4	Record/ Playback Head Azimuth Alignment	15 kHz Azimuth Tape (DA09004A)	VTVM to Output Jacks	Playback Eq. SW — 70 μs Dolby NR SW — OFF	Record/Playback Head Azimuth Alignment Screw	Adjust the Record/Playback Head Azimuth Alignment Screw to obtain maximum readings of both channels on the VTVM.
5	Playback Level Calibration	400 Hz Level Tape (DA09005A)	VTVM to TP101, TP201 on Main P.C.B.	Same as above	Main P.C.B. VR101,VR201	Adjust VR101 (VR201) to obtain 90 mV on the VTVM.
6	Playback Frequency Response Adjustment	400 Hz Level Tape (DA09005A) 10 kHz PB Frequency Response Tape (DA09003A) 15 kHz PB Frequency Response Tape (DA09002A) 20 kHz PB Frequency Response Tape (DA09001A)	VTVM to Output Jacks	Same as above		1. Load a 400 Hz level tape and play it back. 2. Load 10 kHz, 15 kHz and 20 kHz PB frequency response tapes and adjust the record/playback head azimuth to obtain maximum levels on the VTVM with each tape. 3. Read the maximum levels with each tape and check to insure that the levels against the 400 Hz level tape are within the following ranges. 10 kHz (—20 dB) —2 dB to +2 dB 15 kHz (—20 dB) —2 dB to +3 dB 20 kHz (—20 dB) —2 dB to +4 dB Note: If the playback level of 15 kHz PB frequency response tape exceeds the above mentioned level, remove C107 (C207) 150 pF in the playback eq. amp. circuit of the Main P.C.B. Ass'y. 4. Conduct step 4 "Record/Playback Head Azimuth Alignment".
7	Bias Oscillation Frequency and Erase Current Adjustment		Frequency Counter to TP102 on Main P.C.B. and VTVM across the additional 0.1 Ω resistor	Record, Pause Tape SW — ZX Eq. SW — 70 μs Dolby NR SW — OFF	Main P.C.B. T301 R318,R350	1. Adjust T301 to obtain 105 kHz on the frequency counter. 2. Connect an additional 0.1 Ω resistor in series to the Erase Head, then connect a VTVM across it. 3. Check the erase current by the VTVM. Erase current will be in a range of 145 mA to 185 mA (typically approx. 165 mA). If erase current is not sufficient, increase it by shorting R318 or R350. 4. After completion of the erase current adjustment, re-check the bias oscillation frequency. 5. Remove the additional 0.1 Ω resistor.
8	Record Amplifier Equalizer Adjustment	21 kHz (—20 dB) to Input Jacks	VTVM to TP102, TP202 on Main P.C.B.	Same as above	Main P.C.B. L102,L202	1. Short both Bias Stop test pins with a clip to stop the bias oscillation. 2. Adjust L102 (L202) to obtain peak reading at 21 kHz on the VTVM. 3. Remove the clip from the test pins.
9	Bias Trap Adjustment (Record Amp.)	Remove input signals	VTVM to TP103, TP203 on Main P.C.B.	Same as above	Main P.C.B. L103,L203	Adjust L103 (L203) to obtain maximum reading on the VTVM.

STEP	ITEM	SIGNAL SOURCE	OUTPUT CONNECTION	MODE	ADJUST-MENT	REMARKS
10	Record Level Calibration and Recording Bias Current Adjustment	400 Hz (0 dB), 400 Hz (−20 dB), 10 kHz (−20 dB) and 17 kHz (−20 dB) to Input Jacks	VTVM to TP102, TP202 on Main P.C.B. and VTVM and Distortion Meter to Output Jacks	Record and Playback Tape SW — ZX/SX/EX Eq. SW — 70 μs (ZX/SX) 120 μs (EX) Dolby NR SW — OFF/ON	Main P.C.B. (Level) ZX: VR102,VR202 SX: VR103,VR203 EX: VR104,VR204 (Bias) ZX: VR105,VR205 SX: VR106,VR206 EX: VR107,VR207	Adjustment should be made in the order of ZX, SX and EX. 1. Set the Dolby NR switch to OFF. 2. Connect a VTVM to output Jacks. 3. Set the BX-1 in Record/Pause mode. 4. Feed in 400 Hz, then adjust the Input Level control to obtain 500 mV (0 dB) on the VTVM. 5. Load a reference ZX tape (DA09037A), reference SX tape (DA09025A) and reference EXII tape (DA09066A). 6. Adjust Record Cal. VR102 (VR202) for ZX, VR103 (VR203) for SX and VR104 (VR204) for EXII to center positions. 7. Connect the VTVM to TP102 (TP202) on the Main P.C.B. Ass'y. Adjust Bias VR105 (VR205) for ZX, VR106 (VR206) for SX and VR107 (VR207) for EXII to obtain the following bias current in Record/Pause mode (the VTVM is connected across a 10-ohm resistor). ZX: approx. 1 mA SX: approx. 0.5 mA EXII: approx. 0.3 mA 8. Connect the VTVM to the Output Jacks. 9. Feed in 400 Hz (−20 dB) and 17 kHz (−20 dB), then record, rewind and play them back. Adjust Bias VR105 (VR205) for ZX, VR106 (VR206) for SX and VR107 (VR207) for EXII to obtain the same playback levels at 400 Hz (−20 dB) and 17 kHz (−20 dB) on the VTVM. 10. Feed in 400 Hz (0 dB), then record, rewind and play it back. Adjust Record Cal. VR102 (VR202) for ZX, VR103 (VR203) for SX and VR104 (VR204) for EXII to obtain 0 dB on the VTVM. 11. Repeat above 9 and 10 two or three times to obtain optimum performance. 12. Set the Dolby NR switch to ON. 13. Feed in 400 Hz (−20 dB), 10 kHz (−20 dB) and 17 kHz (−20 dB), then record, rewind and play them back. Check to insure that the playback levels are within ±2 dB against the levels in Dolby NR OFF. 14. Check to insure whether the total harmonic distortion is less than 1.0% for ZX and EXII tapes and 1.2% for SX tape. 15. If above is not sufficient, repeat 9 to 14 till satisfactory results are obtained.
11	Overall Frequency Response Adjustment	400 Hz (0 dB) and 20 Hz to 17 kHz (−20 dB) to Input Jacks	VTVM to Output Jacks	Record and Playback Tape SW — ZX/SX/EX Eq. SW — 70 μs (ZX/SX) 120 μs (EX) Dolby NR SW — OFF	Main P.C.B. L102,L202	1. Set the BX-1 in Record/Pause mode. 2. Feed in 400 Hz, then set the Input Level control to obtain 0 dB (500 mV) on the VTVM. 3. Decrease the generator output control by 20 dB. 4. Feed in 20 Hz to 17 kHz (−20 dB) and record, rewind and play them back, then check to insure whether the output levels are within −20 dB ±4 dB. 5. If above is not sufficient, adjust L102 (L202) to obtain approx. −20 dB on the VTVM, then conduct step 10 "Record Level Calibration and Recording Bias Current Adjustment". 6. If above is not sufficient, precise re-adjustment of step 6 "Playback Frequency Response", replacement of Record/Playback Head or check on item 2.5 "Tape Travelling Check" will be required.
12	Crosstalk Measurement	1 kHz to Input Jacks	1 kHz Band Pass Filter and VTVM to Output Jacks	Record and Playback Tape SW — ZX Eq. SW — 70 μs Dolby NR SW — OFF		1. Erase the tape with bulk eraser. 2. Adjust the Input Level control to obtain 0 dB on the VTVM, and record the signals on the reference ZX tape (DA09037A). 3. Turn the cassette tape the other way round and play it back. 4. Measure the difference between 2 and 3.
13	Channel Separation Measurement	1 kHz to Input Jacks	Same as above	Same as above		1. Erase the tape with bulk eraser. 2. Adjust the Input Level control to obtain 0 dB on the VTVM, and set the Balance control to the extreme left (right). 3. Record, rewind and play it back, then measure the R ch (L ch) level.

STEP	ITEM	SIGNAL SOURCE	OUTPUT CONNECTION	MODE	ADJUST-MENT	REMARKS
14	Erasure Measure-ment	100 Hz to Input Jacks	100 Hz Band Pass Filter and VTVM to Output Jacks	Record and Playback Tape SW — ZX Eq. SW — 70 μs Dolby NR SW — OFF		1. Erase the tape with bulk eraser. 2. Adjust the Input Level control to obtain 0 dB on the VTVM, and record the signals on the reference ZX tape (DA09037A). 3. Rewind the tape, set the Input Level control to minimum, and then record again. 4. Rewind the tape, play it back, and then measure the difference between 2 and 3.
15	Signal to Noise Ratio Measure-ment	400 Hz to Input Jacks	IHF-A Curve, Filter, VTVM and Distortion Meter to Output Jacks	Record and Playback Tape SW — ZX Eq. SW — 70 μs Dolby NR SW — ON		1. Set the Dolby NR switch to ON. 2. Feed in 400 Hz, then record, rewind and play it back. 3. Adjust the Input Level control to obtain 3% total harmonic distortion in Playback mode. 4. Set the Input Level control to minimum then record again. 5. After rewound, play back and check the output level difference between 3 and 4. Note: The filter of IHF-A curve shall be used in the measurements.
16	Total Harmonic Distortion Measure-Ment	400 Hz to Input Jacks	VTVM and Distortion Meter to Output Jacks	Record and Playback Tape SW — ZX/SX/EX Eq. SW — 70 μs (ZX/SX) 120 μs (EX) Dolby NR SW — OFF		1. Adjust the Input Level control to obtain 0 dB on the VTVM. 2. Record, rewind and play it back. 3. Read the distortion meter and check to insure that the distortion is as follows: EXII . . . . . 1.0% or less SX . . . . . 1.2% or less ZX . . . . . 1.0% or less
17	Wow/ Flutter Measure-ment	3 kHz Speed and Wow/ Flutter Tape (DA09006B)	Wow/Flutter Meter to Output Jacks	Playback Eq. SW — 70 μs		Play back and read the wow/flutter meter.

4.2. Check on Dolby NR Circuit

Dolby NR circuit incorporates a Dolby NR IC (μA7300PC) which has no adjustment point.

Perform the following checks and make sure that the IC operates accurately i.e., frequency response through IC is accurate.

Signal Source: 1.4 kHz to Input Jacks
Output Connection: VTVM to TP101 (TP201) and negative side of C141 (C241) on the Main P.C.B.
Mode: Record/Pause

(1) Connect a VTVM to TP101 (TP201) on the Main P.C.B. Ass'y. Feed in 1.4 kHz and adjust the Input level control so that the VTVM may read 90 mV (0 dB) at each test point. Level meter will indicate 0 dB.

(2) Remove the VTVM from TP101 (TP201) and reconnect it to the negative side of C141 (C241).

(3) Decrease the input level (0 dB) by 20 dB or 30 dB. Check to insure that the level at negative side of C141 (C241) corresponds to the following with the Dolby NR switch ON and OFF.

Input Level at TP101 (TP201)	Level at negative side of C141 (C241)	
	Dolby NR OFF	Dolby NR B-Type
9 mV	0 dB	+3.2 dB ±1.5 dB
2.85 mV	0 dB	+8.2 dB ±1.5 dB

5. MECHANISM ASS'Y AND PARTS LIST

5.1. Synthesis

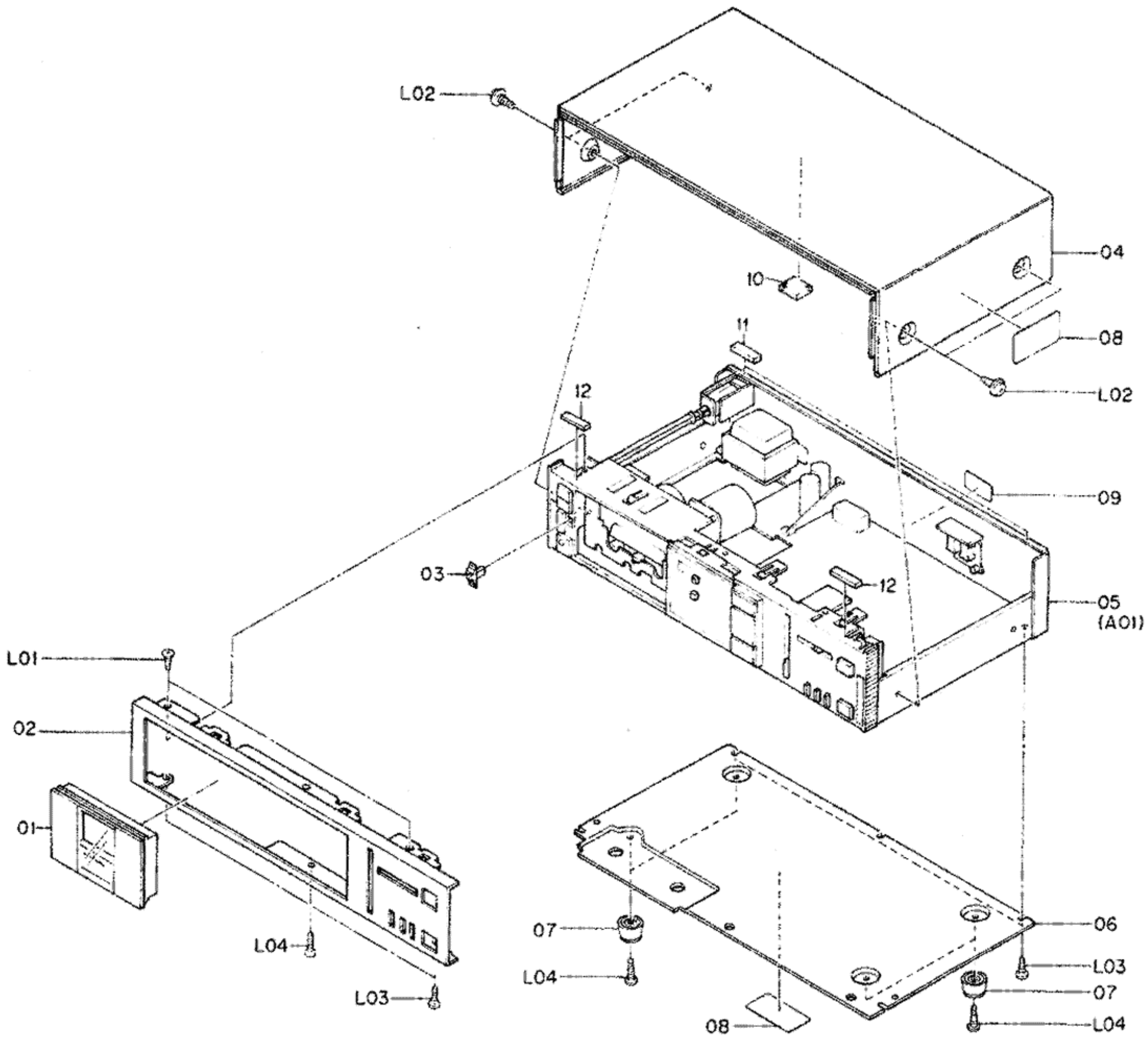

Fig. 5.1

Schematic Ref. No.	Part No.	Description	Q'ty	Schematic Ref. No.	Part No.	Description	Q'ty
	HA04330A	Synthesis (UK)	1		HA04336A	Synthesis (UK)	1
	HA04331A	Synthesis (U.S.A. & Canada)	1		HA04337A	Synthesis (U.S.A. & Canada)	1
	HA04332A	Synthesis (Japan)	1		HA04338A	Synthesis (Japan)	1
	HA04333A	Synthesis (Others)	1		HA04339A	Synthesis (Others)	1
	HA04334A	Synthesis (Australia)	1		HA04340A	Synthesis (Australia)	1
	HA04335A	Synthesis (220V Class 2)	1		HA04341A	Synthesis (220V Class 2)	1
		Serial No.: A31401001 - (Silver)				Serial No.: A31501001 - (Black)	
01	HA04362A	Cassette Case Cover Ass'y	1	01	HA04363A	Cassette Case Cover Ass'y	1
02	0H04131B	Front Panel	1	02	0H04132B	Front Panel	1
03	0H04107A	Slide Switch Knob	1	03	0H04108A	Slide Switch Knob	1
04	0H04155B	Top Cover	1	04	0H04156B	Top Cover	1
05	JA03945B	Synthesis Mechanism Ass'y (UK)	1	05	JA03951B	Synthesis Mechanism Ass'y (UK)	1
	JA03946B	Synthesis Mechanism Ass'y (U.S.A. & Canada)	1		JA03952B	Synthesis Mechanism Ass'y (U.S.A. & Canada)	1
	JA03947B	Synthesis Mechanism Ass'y (Japan)	1		JA03953B	Synthesis Mechanism Ass'y (Japan)	1
	JA03948B	Synthesis Mechanism Ass'y (Others)	1		JA03954B	Synthesis Mechanism Ass'y (Others)	1
	JA03949B	Synthesis Mechanism Ass'y (Australia)	1		JA03955B	Synthesis Mechanism Ass'y (Australia)	1
	JA03950B	Synthesis Mechanism Ass'y (220V Class 2)	1		JA03956B	Synthesis Mechanism Ass'y (220V Class 2)	1
06	0J04605B	Bottom Cover	1	06	0J04605B	Bottom Cover	1
07	0J03564A	Leg T-H	4	07	0J03564A	Leg T-H	4
08	0M04377A	Caution Label	2	08	0M04377A	Caution Label	2
09	0M03551B	Pass Label B	1	09	0M03551B	Pass Label B	1
10	0J04630A	Rubber	1	10	0J04630A	Rubber	1
11	0J04629A	Top Cover Cushion B	2	11	0J04629A	Top Cover Cushion B	2
12	0J04628A	Top Cover Cushion A	2	12	0J04628A	Top Cover Cushion A	2
L01	0E03054A	BT 3x8 ⊕ Countersunk	2	L01	0E03054A	BT 3x8 ⊕ Countersunk	2
L02	0E03033A	BT 4x8 ⊕ Pan Washer Faced (Nickel)	4	L02	0E03032A	BT 4x8 ⊕ Pan Washer Faced (Black Chromate)	4
L03	0E00857A	BT 3x6 ⊕ Binding	5	L03	0E00857A	BT 3x6 ⊕ Binding	5
L04	0E00865A	BT 3x10 ⊕ Binding	5	L04	0E00865A	BT 3x10 ⊕ Binding	5
—	0M03796A	Voltage Label 220V (220V Class 2)	1	—	0M03796A	Voltage Label 220V (220V Class 2)	1
—	0M03797A	Voltage Label 240V (UK & Australia)	1	—	0M03797A	Voltage Label 240V (UK & Australia)	1
—	0M03844B	Cord Label (UK)	1	—	0M03844A	Cord Label (UK)	1
—	0M04395A	Serial Number Plate	1	—	0M04395A	Serial Number Plate	1
—	0M04113A	LA Label (U.S.A. & Canada)	1	—	0M04113A	LA Label (U.S.A. & Canada)	1
—	0M04293A	Voltage Seal (Others)	1	—	0M04293A	Voltage Seal (Others)	1
—	0M04185A	FSZ Mark Label (220V Class 2)	1	—	0M04185A	FSZ Mark Label (220V Class 2)	1

5.2. Synthesis Mechanism Ass'y (A01)

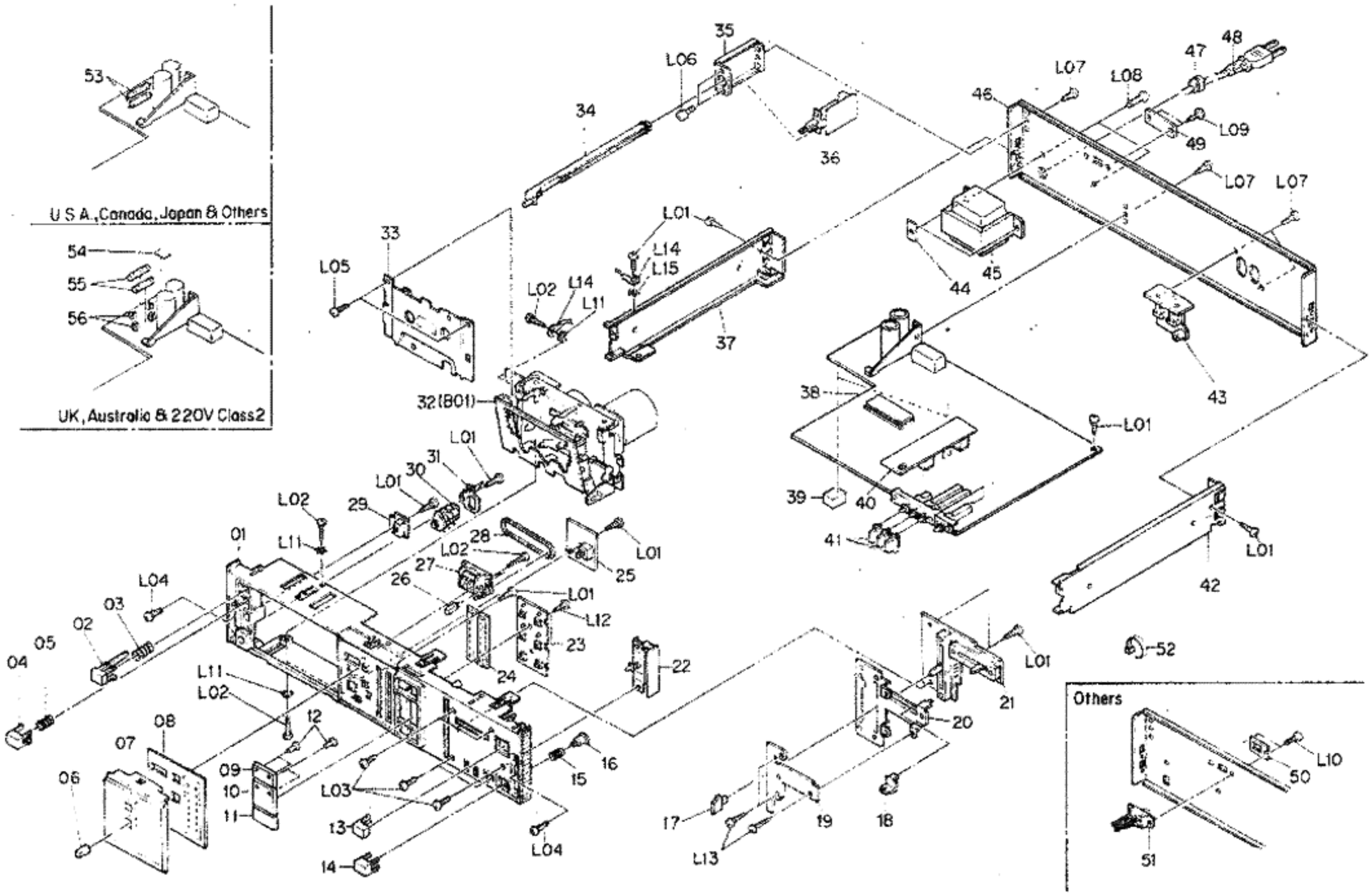

Fig. 5.2

Schematic Ref. No.	Part No.	Description	Q'ty	Schematic Ref. No.	Part No.	Description	Q'ty
A01	JA03945B	Synthesis Mechanism Ass'y (UK)	1	25	BA04791A	Memory Switch P.C.B. Ass'y	1
	JA03946B	Synthesis Mechanism Ass'y (U.S.A. & Canada)	1	26	0H04128A	Counter Reset Button	1
				27	0C08344A	Tape Counter	1
	JA03947B	Synthesis Mechanism Ass'y (Japan)	1	28	0C08343A	Counter Belt	1
				29	BA04795A	Timer Switch P.C.B. Ass'y	1
	JA03948B	Synthesis Mechanism Ass'y (Others)	1	30	0B08511A	Headphone Jack	1
				31	0J04611A	Headphone Plate	1
	JA03949B	Synthesis Mechanism Ass'y (Australia)	1	32	CA08399A	Mechanism Ass'y	1
				33	HA04390A	Cover Plate Ass'y	1
	JA03950B	Synthesis Mechanism Ass'y (220V Class 2)	1	34	0J04604B	Power Switch Joint	1
				35	0J04076A	Power Switch Holder	1
		Serial No.: A31401001 - (Silver)		36	BA04823A	Power Switch P.C.B. Ass'y (U.S.A. & Canada)	1
01	0H04135A	Front Chassis	1		BA04824A	Power Switch P.C.B. Ass'y (UK, Australia, 220V Class 2 & Others)	1
02	0H04129A	Eject Button	1				
03	0J04607A	Eject Spring	1				
04	0H04125A	Power Switch Button	1		BA04825A	Power Switch P.C.B. Ass'y (Japan)	1
05	0J04608A	Power Switch Spring	1	37	0J04603D	Side Chassis L	1
06	0H04127A	Memory Switch Button	1	38	BA04854A	Main P.C.B. Ass'y	1
07	0H04111B	Meter Cover	1	39	0J04581A	Main P.C.B. Cushion	2
08	0H04109A	Meter Scale	1	40	BA04853A	MPX P.C.B. Ass'y	1
09	0H04143A	Control Button A	1	41	0H04101A	Function Knob	3
10	0H04116A	Control Button B	1	42	0J04602D	Side Chassis R	1
11	0H04118A	Control Button C	1	43	BA04794A	Pin Jack P.C.B. Ass'y	1
12	0H04120A	Lens	4	44	0C01162B	Bolt Receptacle Plate	2
13	0H04123A	Dolby NR Switch Button	1	45	0B06698A	Power Transformer (U.S.A. & Canada)	1
14	0H04121A	Eq. Switch Button	1				
15	0J04610A	Eq. Switch Spring	1		0B06697B	Power Transformer (Japan)	1
16	0J04606A	Button Joint	1		0B06699A	Power Transformer (UK, Australia & 220V Class 2)	1
17	0H04105A	Master Volume Knob	1				
18	0H04103A	Balance Volume Knob	1		0B06700B	Power Transformer (Others)	1
19	0H04113A	Volume Plate	1	46	0H04150B	Rear Panel	1
20	0H04618A	Volume Shield Plate	1	47	0B08351A	Cord Bushing 4K-4 (UK)	1
21	BA04793A	Volume P.C.B. Ass'y	1		0B08037U	Cord Bushing (U.S.A., Canada, Japan, Others, Australia & 220V Class 2)	1
22	BA04796A	Dolby NR Switch P.C.B. Ass'y	1				
23	BA04792A	Control Switch P.C.B. Ass'y	1				
24	0B06378A	Display Unit	1				

Schematic Ref. No.	Part No.	Description	Q'ty
48	0B08348A	Power Cord (UK)	1
	0B08533A	Power Cord (U.S.A., Canada & Others)	1
	0B08219B	Power Cord (Japan)	1
	0B05241A	Power Cord (Australia)	1
	0B08093U	Power Cord (220V Class 2)	1
49	0J04622B	Switch Cover (UK, U.S.A., Canada, Japan, Australia & 220V Class 2)	1
50	0M04407A	Voltage Selector Lock Plate (Others)	1
51	0B07092U	Voltage Selector (Others)	1
52	0B08515A	Insu-Lock	10
53	0B08525A	Fuse 2A 250V (U.S.A., Canada & Others)	2
	0B08854A	Fuse 2A 250V (Japan)	2
54	0M04131B	Fuse Label 1A 250V (UK, Australia & 220V Class 2)	1
55	0B08347U	Fuse 1A 250V (UK, Australia & 220V Class 2)	2
56	0B08349A	Fuse Clip (UK, Australia & 220V Class 2)	4
—	0F01071A	Free-up Belt (UK, Australia & 220V Class 2)	1
—	0M03954A	Fuse Caution Label (U.S.A. & Canada)	1
L01	0E00857A	BT 3x6 ⊕ Binding	11
L02	0E00954A	BT 2.6x8 ⊕ Binding	6
L03	0E00509A	M3x6 ⊕ Pan	5
L04	0E00868A	BT 3x8 ⊕ Binding	2
L05	0E00824A	BT 2.6x6 ⊕ Binding (Black Chromate)	2
L06	0E00612A	M3x6 ⊕ Pan (2A)	2
L07	0E03028A	BT 3x8 ⊕ Binding (Nickel)	4
L08	0E03034A	M4x8 ⊕ Binding (Nickel)	2
L09	0E08583A	Plastic Rivet	2
*L10	0E03031A	M3x8 ⊕ Binding (Nickel)	2
L11	0E00233A	Washer 2.6mm Toothed Lock	4
L12	0E00862A	BT 3x6 ⊕ Pan	2
L13	0E00714A	M2.6x6 ⊕ Binding (Bronze)	3
L14	0E00037A	Earth Lug B-5	2
L15	0E00172A	Washer 3mm Toothed Lock	1
—	0B02247A	PD Wire (Pin Jack — Volume)	2
—	0B02248A	PD Wire (Pin Jack — Main)	1
—	0B02256A	PD Wire (Main — Headphone)	1
—	0B02292B	PD Wire (Pin Jack — Chassis)	1
—	0B02293A	PD Wire (Main — Volume)	1
—	0B02294A	PD Wire (Main — Volume)	1
—	0B02296A	PD Wire (Main — MPX)	1
—	0B02297A	PD Wire (Dolby NR Switch — MPX)	1
—	0B05273A	2P Flat Cable FC7 (Dolby NR Switch — Memory Switch)	1
—	0B05275A	4P Flat Cable FC5 (Main — Timer Switch)	1
—	0B05276A	4P Flat Cable FC2 (Main — Control Switch)	1
—	0B05297A	5P Flat Cable FC4 (Main — Control Switch)	1
—	0B05290A	4P Flat Cable FC3 (Main — Control Switch)	1
—	0B05291A	2P Flat Cable FC8,9 (Main — Memory Switch, Counter)	2
—	0B05292A	12P Flat Cable FC1 (Main — Display Unit)	1
—	0B05298A	3P Flat Cable FC6 (main — Dolby NR Switch)	1
		*: Depends on the versions.	
A01	JA03951B	Synthesis Mechanism Ass'y (UK)	1
	JA03952B	Synthesis Mechanism Ass'y (U.S.A. & Canada)	1
	JA03953B	Synthesis Mechanism Ass'y (Japan)	1
	JA03954B	Synthesis Mechanism Ass'y (Others)	1
	JA03955B	Synthesis Mechanism Ass'y (Australia)	1
	JA03956B	Synthesis Mechanism Ass'y (220V Class 2) Serial No.: A31501001 - (Black)	1
01	0H04136A	Front Chassis	1
02	0H04130A	Eject Button	1
03	0J04607A	Eject Spring	1
04	0H04126A	Power Switch Button	1
05	0J04608A	Power Switch Spring	1
06	0H04127A	Memory Switch Button	1
07	0H04111B	Meter Cover	1
08	0H04109A	Meter Scale	1
09	0H04144A	Control Button A	1
10	0H04117A	Control Button B	1
11	0H04119A	Control Button C	1
12	0H04120A	Lens	4
13	0H04124A	Dolby NR Switch Button	1
14	0H04122A	Eq. Switch Button	1
15	0J04610A	Eq. Switch Spring	1
16	0J04606A	Button Joint	1
17	0H04106A	Master Volume Knob	1
18	0H04104A	Balance Volume Knob	1
19	0H04114A	Volume Plate	1
20	0H04618A	Volume Shield Plate	1
21	BA04793A	Volume P.C.B. Ass'y	1
22	BA04796A	Dolby NR Switch P.C.B. Ass'y	1
23	BA04792A	Control Switch P.C.B. Ass'y	1
24	0B06378A	Display Unit	1
25	BA04791A	Memory Switch P.C.B. Ass'y	1
26	0H04128A	Counter Reset Button	1
27	0C08344A	Tape Counter	1
28	0C08343A	Counter Belt	1
29	BA04795A	Timer Switch P.C.B. Ass'y	1
30	0B08511A	Headphone Jack	1
31	0J04611A	Headphone Plate	1
32	CA08399A	Mechanism Ass'y	1
33	HA04390A	Cover Plate Ass'y	1
34	0J04604B	Power Switch Joint	1
35	0J04076A	Power Switch Holder	1
36	BA04823A	Power Switch P.C.B. Ass'y (U.S.A. & Canada)	1
	BA04824A	Power Switch P.C.B. Ass'y (UK, Australia, 220V Class 2 & Others)	1
	BA04825A	Power Switch P.C.B. Ass'y (Japan)	1
37	0J04603D	Side Chassis L	1
38	BA04854A	Main P.C.B. Ass'y	1
39	0J04581A	Main P.C.B. Cushion	2
40	BA04853A	MPX P.C.B. Ass'y	1
41	0H04102A	Function Knob	3
42	0J04602D	Side Chassis R	1
43	BA04794A	Pin Jack P.C.B. Ass'y	1
44	0C01162B	Bolt Receptacle Plate	2
45	0B06698A	Power Transformer (U.S.A. & Canada)	1
	0B06697B	Power Transformer (Japan)	1
	0B06699A	Power Transformer (UK, Australia & 220V Class 2)	1
	0B06700B	Power Transformer (Others)	1
46	0H04151B	Rear Panel	1
47	0B08351A	Cord Bushing 4K-4 (UK)	1
	0B08037U	Cord Bushing (U.S.A., Canada, Japan, Others, Australia & 220V Class 2)	1
48	0B08348A	Power Cord (UK)	1
	0B08533A	Power Cord (U.S.A., Canada & Others)	1
	0B08219B	Power Cord (Japan)	1
	0B05241A	Power Cord (Australia)	1
	0B08093U	Power Cord (220V Class 2)	1
49	0J04601B	Switch Cover (UK, U.S.A., Canada, Japan, Australia & 220V Class 2)	1
50	0M03948A	Voltage Selector Lock Plate (Others)	1
51	0B07092U	Voltage Selector (Others)	1
52	0B08515A	Insu-Lock	10
53	0B08525A	Fuse 2A 250V (U.S.A., Canada & Others)	2
	0B08854A	Fuse 2A 250V (Japan)	2
54	0M04131A	Fuse Label 1A 250V (UK, Australia & 220V Class 2)	1
55	0B08347U	Fuse 1A 250V (UK, Australia & 220V Class 2)	2
56	0B08349A	Fuse Clip (UK, Australia & 220V Class 2)	4
—	0F01071A	Free-up Belt (UK, Australia & 220V Class 2)	1
—	0M03954A	Fuse Caution Label (U.S.A. & Canada)	1
L01	0E00857A	BT 3x6 ⊕ Binding	11
L02	0E00954A	BT 2.6x8 ⊕ Binding	6
L03	0E00509A	M3x6 ⊕ Pan	5
L04	0E00868A	BT 3x8 ⊕ Binding	2
L05	0E00824A	BT 2.6x6 ⊕ Binding (Black Chromate)	2
L06	0E00612A	M3x6 ⊕ Pan (2A)	2
L07	0E00921A	BT 3x8 ⊕ Binding (Black Chromate)	4
L08	0E03058A	M4x8 ⊕ Binding (Black Chromate)	2
L09	0E08583A	Plastic Rivet	2
*L10	0E00818A	M3x8 ⊕ Binding (Bronze)	2

(to be continued)

Schematic Ref. No.	Part No.	Description	Q'ty	Schematic Ref. No.	Part No.	Description	Q'ty
L11	0E00233A	Washer 2.6mm Toothed Lock	4	—	0B05276A	4P Flat Cable FC2 (Main — Control Switch)	1
L12	0E00862A	BT 3x6 ⊕ Pan	2				
L13	0E00714A	M2.6x6 ⊕ Binding (Bronze)	3	—	0B05297A	5P Flat Cable FC4 (Main — Control Switch)	1
L14	0E00037A	Earth Lug B-5	2				
L15	0E00172A	Washer 3mm Toothed Lock	1	—	0B05290A	4P Flat Cable FC3 (Main — Control Switch)	1
—	0B02247A	PD Wire (Pin Jack — Volume)	2				
—	0B02248A	PD Wire (Pin Jack — Main)	1	—	0B05291A	2P Flat Cable FC8,9 (Main — Memory Switch, Counter)	2
—	0B02256A	PD Wire (Main — Headphone)	1				
—	0B02292B	PD Wire (Pin Jack — Chassis)	1	—	0B05292A	12P Flat Cable FC1 (Main — Display Unit)	1
—	0B02293A	PD Wire (Main — Volume)	1				
—	0B02294A	PD Wire (Main — Volume)	1	—	0B05298A	3P Flat Cable FC6 (main — Dolby NR Switch)	1
—	0B02296A	PD Wire (Main — MPX)	1				
—	0B02297A	PD Wire (Dolby NR Switch — MPX)	1			*: Depends on the versions.	
—	0B05273A	2P Flat Cable FC7 (Dolby NR Switch — Memory Switch)	1				
—	0B05275A	4P Flat Cable FC5 (Main — Timer Switch)	1				

5.3. Mechanism Ass'y (B01)

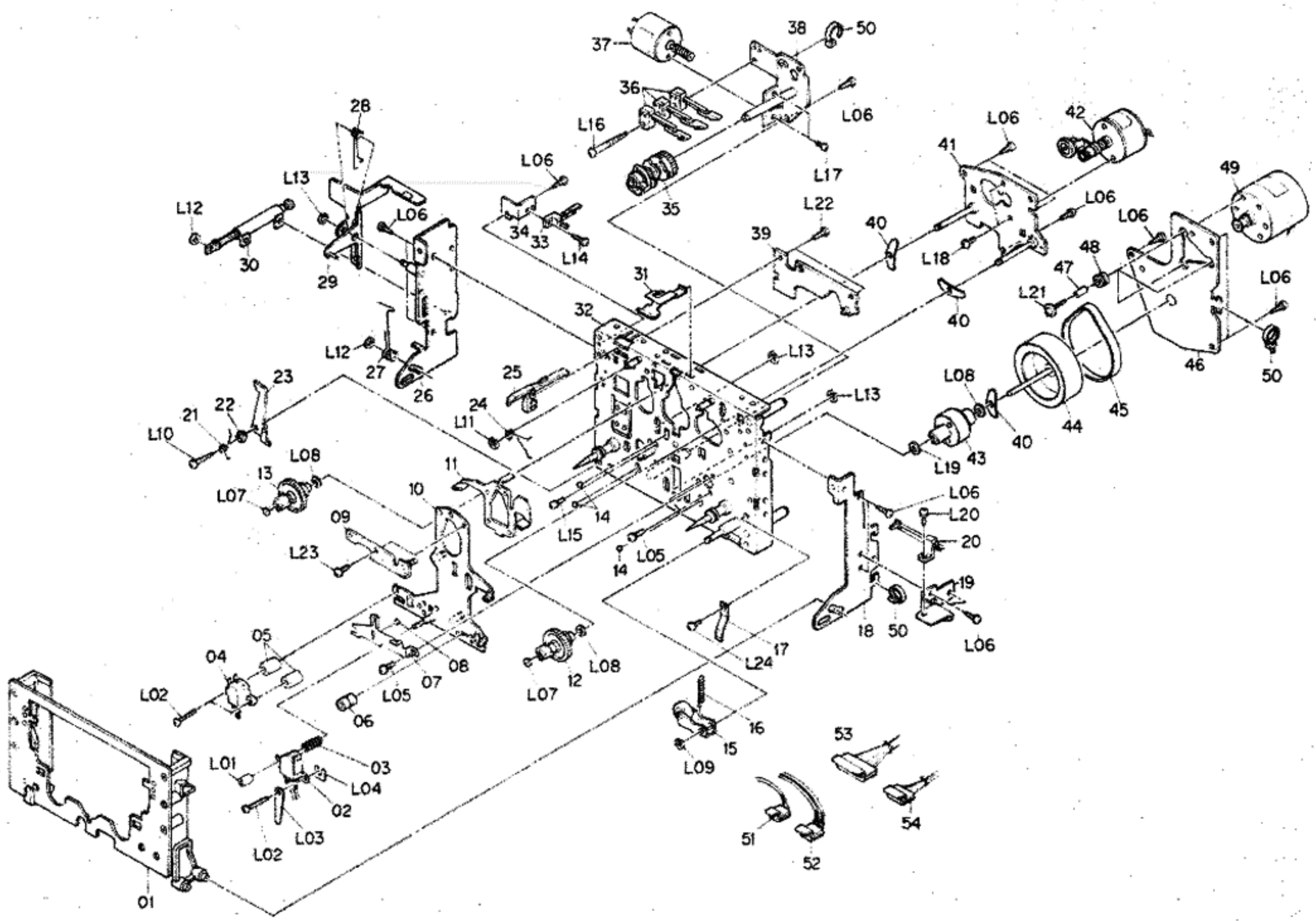

Fig. 5.3

Schematic Ref. No.	Part No.	Description	Q'ty
B01	CA08399A	Mechanism Ass'y Serial No.: A314.501001 -	1
01	CA80001A	Cassette Case Ass'y	1
02	0G01371A	Record/Playback Head RP-2G	1
03	0C80001A	Azimuth Adjust Spring	1
04	0G01365A	Erase Head E-2D	1
05	0C80044A	Erase Head Collar	2
06	0C80045A	Record/Playback Head Collar	1
07	0C80003A	Head Base Hold Plate	1
08	0C80004A	Steel Ball 30	1
09	0C80005A	Reinforce Plate	1
10	0C80006A	Head Base	1
11	CA80002A	Brake Ass'y	1
12	CA80003A	Take-up Reel Hub Ass'y	1
13	CA80004A	Supply Reel Hub Ass'y	1
14	0C80007A	Steel Ball 20	3
15	CA80005A	Pressure Roller Ass'y	1
16	0C80008A	Pressure Roller Spring	1
17	0C80009A	Cassette Case Spring	1
18	0C80010A	Cassette Case Holder R	1
19	0C80011A	Eject Sensor Holder	1
20	0C80012A	Eject Sensor	1
21	0C80013A	Lock Lever Spring	1
22	0C80014A	Lock Lever Collar	1
23	0C80015A	Lock Lever	1
24	0C80016A	Brake Spring	1
25	0C80017A	Record Protector Lever	1
26	0C80018A	Cassette Case Holder L	1
27	0C80019A	Eject Spring	1
28	0C80020A	Eject Lever Spring	1
29	0C80021A	Eject Lever	1
30	CA80006A	Pneumatic Damper Ass'y	1
31	0C80022A	Cassette Hold Spring	1
32	0C80023A	Mechanism Chassis	1
33	0C80024A	Record Protector	1
34	0C80025A	Record Protector Holder	1
35	0C80026A	Cam	1
36	0C80027A	Mode Switch	3
37	CA80007A	Control Motor Ass'y	1
38	0C80028A	Control Motor Holder	1
39	CA80011A	Shut-off P.C.B. Ass'y	1
40	0C80029A	Back Tension Spring	3
41	0C80030A	Reel Motor Holder	1
42	CA80008A	Reel Motor Ass'y	1
43	0C80031A	Capstan Flange	1
44	0C80033A	Flywheel	1
45	0C80034A	Capstan Belt	1
46	CA80009A	Flywheel Holder Ass'y	1
47	0C80035A	Sleeve	3
48	0C80036A	Floating Rubber	3
49	CA80010A	Capstan Motor Ass'y	1
50	0C80037A	Insu-Lock	3
51	0C80040A	2P-H Connector	1
52	0C80041A	4P-H Connector	1
53	0C80042A	9P-H Connector	1
54	0C80043A	5P-H Connector	1
L01	0C80046A	Azimuth Adjust Screw	1
L02	0E03038A	M2x12 ⊕ Binding	3
L03	0E03053A	Wire Holder	1
L04	0C80048A	Shim 0.03T	(1)
	0C80038A	Shim 0.06T	(1)
	0C80039A	Shim 0.1T	(1)
L05	0E03046A	M2.6x6 ⊕ Pan (2A)	3
L06	0E03042A	FT M2.5x5 ⊕ Pan	14
L07	0E03049A	Washer 1.8mm FT	2
L08	0E03050A	Washer 3.1mm FT	3
L09	0E00222A	E-Ring 2mm	1
L10	0E03043A	FT M2.5x10 ⊕ Pan	1
L11	0E00698A	E-Ring 2.5mm	1
L12	0E03052A	Stopper Ring 2.4mm	2
L13	0E00181A	E-Ring 3mm	3
L14	0E03048A	FT M2.6x6 ⊕ Pan	1
L15	0E03036A	M2x4 ⊕ Pan (2A)	1
L16	0E03044A	FT M2.5x20 ⊕ Pan	1
L17	0E00691A	M2x3 ⊕ Pan	2
L18	0E03045A	M2.6x3 ⊕ Binding	2
L19	0E03051A	Capstan Washer	1
L20	0E03037A	M2x5 ⊕ Pan (2A)	1
L21	0E03047A	M2.6x9 ⊕ Pan	3
L22	0E03041A	FT M2.5x4 ⊕ Pan	2
L23	0E03040A	FT M2.5x3.5 ⊕ Pan	1
L24	0E03035A	M2x3.2 ⊕ Truss	1

6. MOUNTING DIAGRAMS AND PARTS LIST

Notes: 1. Mounting diagram shows a dip side view of the printed circuit board.
2. Diode is 1SS53, 1S953, or 1S1555 unless otherwise specified.
3. Abbreviation for part name:
TR — Transistor, SiD — Silicon Diode, GD — Germanium Diode, ZD — Zener Diode
RK — Carbon Resistor, RM — Metal Film Resistor, RF — Fail Safe Type Resistor, RC — Cement Resistor, RW — Wire Wound Resistor
CE — Electrolytic Capacitor, CM — Mylar Capacitor, CC — Ceramic Capacitor, CP — PP Capacitor, CT — Tantalum Capacitor, C — Mica Capacitor

Schematic Ref. No.	Part No.	Description
	BA04823A	Power Switch P.C.B. Ass'y (U.S.A., Canada & Others)
	BA04824A	Power Switch P.C.B. Ass'y (UK, Australia & 220V Class 2)
	BA04825A	Power Switch P.C.B. Ass'y (Japan)
	0B02573A	Power Switch P.C.B.
SW1	0B07406A	Power Switch (Japan)
SW1	0B07407A	Power Switch (U.S.A., Canada & Others)
SW1	0B07408A	Power Switch (UK, Australia & 220V Class 2)
M2	0B08363A	Spark Killer (Japan)
M2	0B08342A	Spark Killer (U.S.A., Canada & Others)
M2	0B08955A	Spark Killer (UK, Australia & 220V Class 2)
	0E00752A	Eyelet 2x3 (3)
	BA04794A	Pin Jack P.C.B. Ass'y
	0B02558A	Pin Jack P.C.B.
	0B02246A	4P Pin Jack (1)
	BA04793A	Volume P.C.B. Ass'y
	0B02559A	Volume P.C.B.
VR301	0B07431A	VR 100K (A) x 2
VR302	0B07433A	VR 100K (MN)
	0J04618A	VR Shield Plate (1)
	0E00509A	M3x6 ⊕ Pan (2)
	BA04796A	Dolby NR Switch P.C.B. Ass'y
	0B02561A	Dolby NR Switch P.C.B.
R301,302	0B01857A	RK 1K 1/4W J
SW301	0B07439A	Push Switch
	0J04615A	Shield Plate (1)
	BA04853A	MPX P.C.B. Ass'y
	0B02574A	MPX P.C.B.
Q101,102 201,202	0B01872A	TR 2SC945 (L)
L101,201	0B06690A	L-C Block
R101,102 201,202	0B05615A	RK 22K 1/4W J
R103,104 203,204	0B05671A	RK 2.2M 1/4W J
R301,302	0B01889A	RK 100K 1/4W J
C101,201	0B09189A	CM 2700P 50V J
C102,202	0B05687A	CM 1200P 50V J
C301	0B05681A	CM 0.01μ 50V J
	BA04795A	Timer Switch P.C.B. Ass'y
	0B02560A	Timer Switch P.C.B.
SW601	0B07437A	Slide Switch
	BA04791A	Memory Switch P.C.B. Ass'y
	0B02556A	Memory Switch P.C.B.
LED301	0B06333A	LED RED TLR124A
SW601	0B07429A	Push Switch

Schematic Ref. No.	Part No.	Description
	BA04792A	Control Switch P.C.B. Ass'y
	0B02557A	Control Switch P.C.B.
Q601	0B01872A	TR 2SC945 (L)
Q602	0B06013A	TR 2SA733
LED601, 602,604	0B06334A	LED GRN TLG124A
LED603	0B06333A	LED RED TLR124A
D605	0B01909A	SiD 1S1555
R601	0B05645A	RK 270 1/4W J
R602,603	0B05795A	RK 150 1/4W J
R604	0B05691A	RK 390 1/4W J
R607	0B01846A	RK 4.7K 1/4W J
C601	0B05557A	CM 0.015μ 50V J
SW601-606	0B07438A	Switch EVQ-QSR05K
	CA80011A	Shut-off P.C.B. Ass'y
	0C80047A	Shut-off P.C.B.
Q601	0B06388A	TR 2SC2812
Q602	0B06389A	Photo Reflector NJL5141
R601,603	0B09840A	RK 680 Leadless
R602	0B09841A	RK 18K Leadless

6.1. Power Switch P.C.B. Ass'y

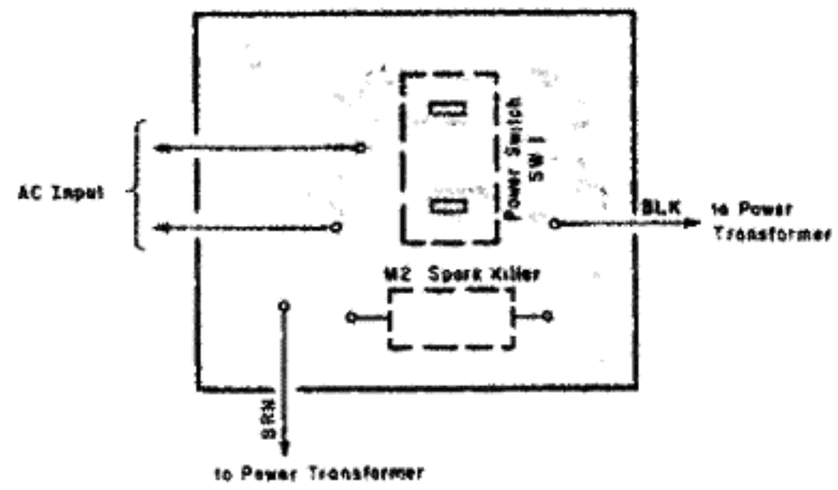

Fig. 6.1

6.2. Pin Jack P.C.B. Ass'y

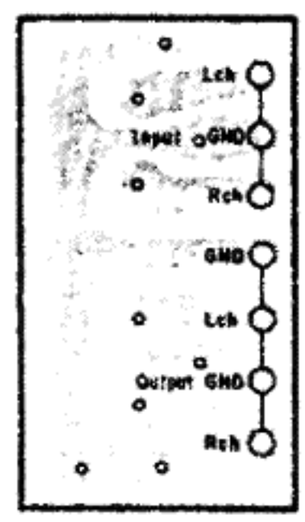

Fig. 6.2

6.3. Volume P.C.B. Ass'y

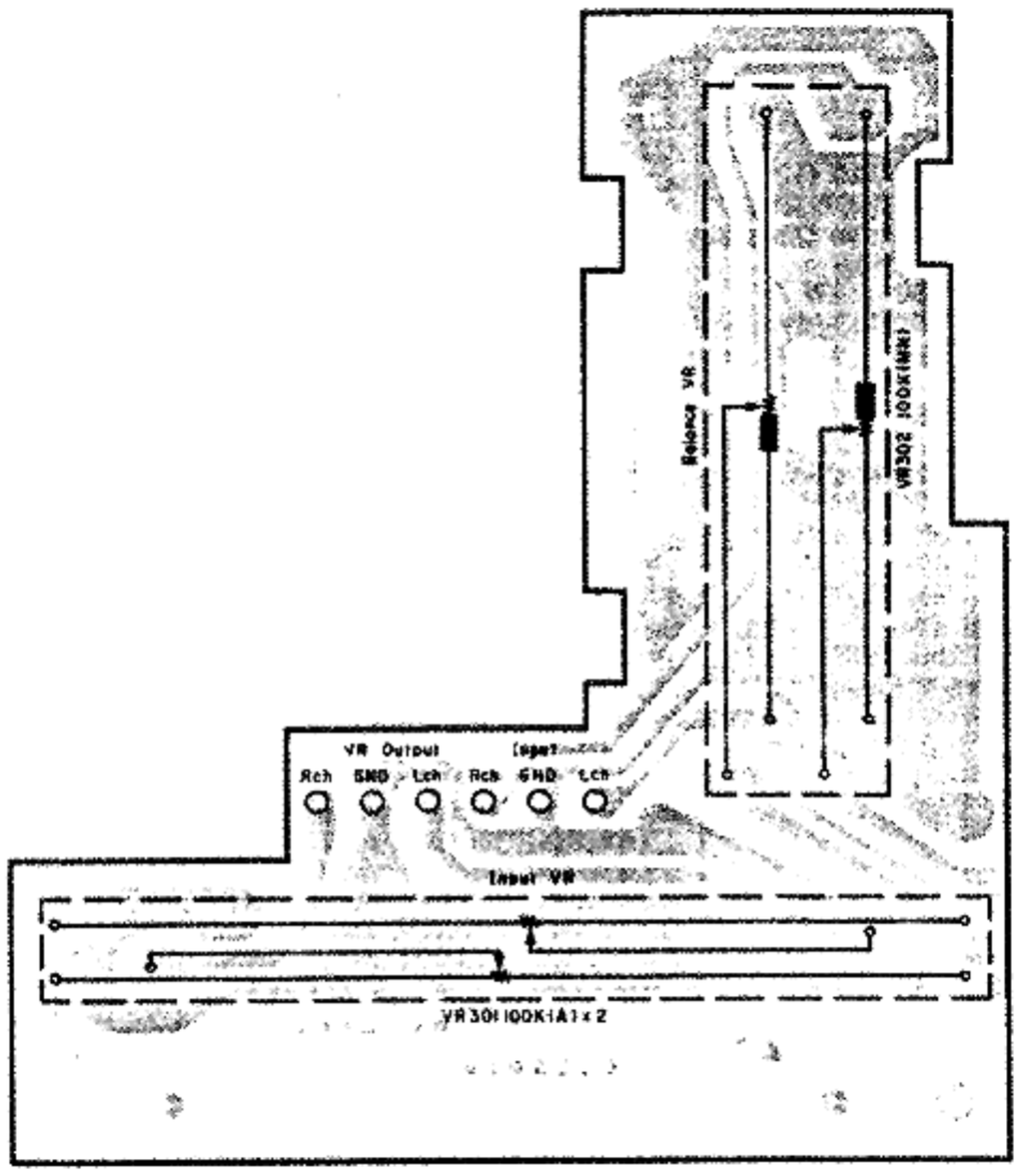

Fig. 6.3

6.4. Dolby NR Switch P.C.B. Ass'y

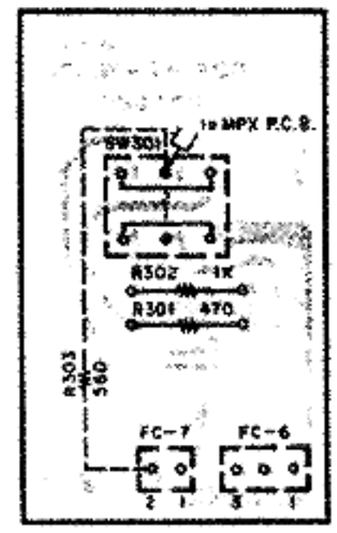

Fig. 6.4

6.5. MPX P.C.B. Ass'y

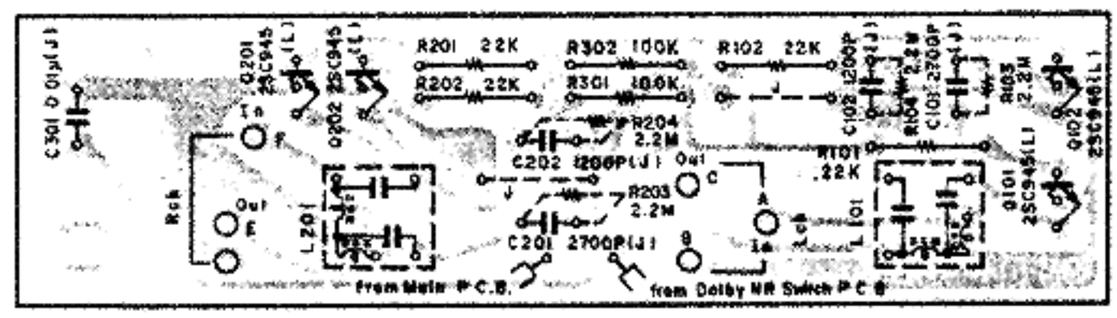

Fig. 6.5

6.6. Timer Switch P.C.B. Ass'y

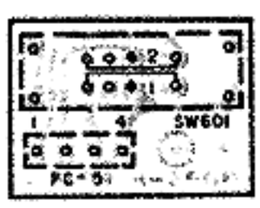

Fig. 6.6

6.7. Memory Switch P.C.B. Ass'y

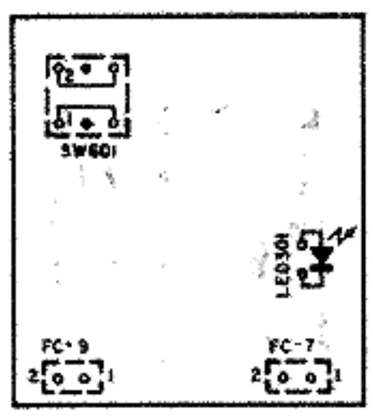

Fig. 6.7

6.8. Control Switch P.C.B. Ass'y

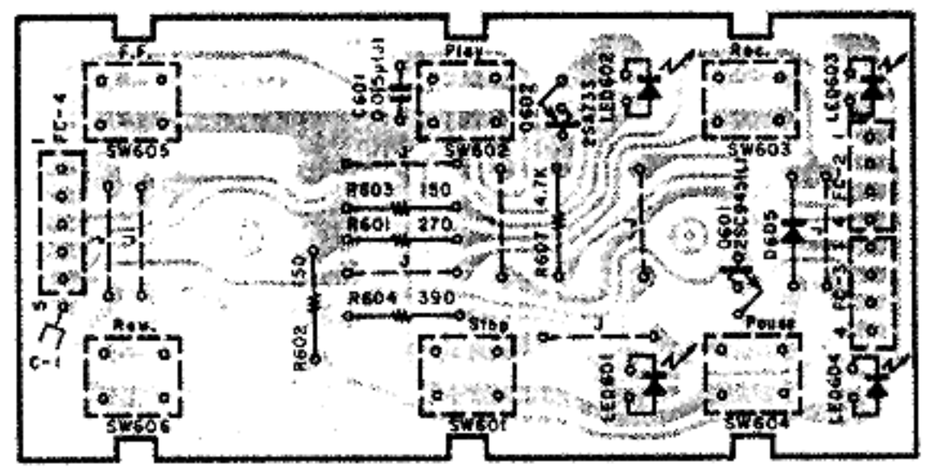

Fig. 6.8

6.9. Shut-off P.C.B. Ass'y

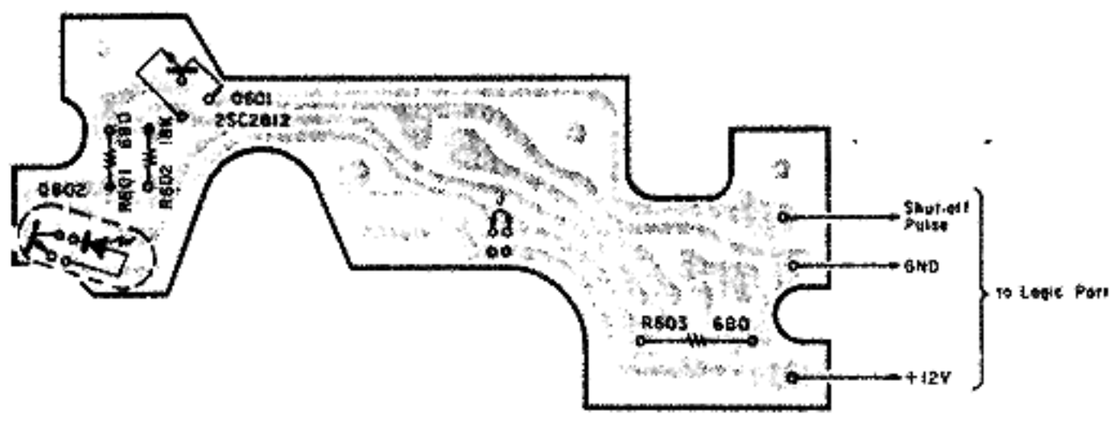

Fig. 6.9

Schematic Ref. No.	Part No.	Description
	BA04790A	Main P.C.B. Ass'y
	— Rec. Level —	
VR102,202	0B07418A	Semi-fixed VR 20K
VR103,104	0B07417A	Semi-fixed VR 10K
203,204		
R127,227	0B01683A	RK 15K 1/4W J
R128,228	0B09577A	RM 7.15K 1/4W F
R129,131	0B01856A	RK 8.2K 1/4W J
229,231		
R130,132	0B01888A	RK 10K 1/4W J
135,137		
230,232		
235,237		
R133,136	0B05629A	RK 2.7K 1/4W J
233,236		
C119,121	0B05571A	CM 680P 50V J
219,221		
C120,220	0B05843A	CM 0.012μ 50V J
C122,222	0B05687A	CM 1200P 50V J
C123,223	0B09189A	CM 2700P 50V J
	— Rec. Eq. Amp. —	
IC303	0B06146A	IC RC4558DD
Q104,204	0B06299A	TR 2SC2878
L102,202	0B00068A	Trap Coil 10.5mH
L103,203	0B06696A	L-C Block TF10
VR105,107	0B07419A	Semi-fixed VR 50K
205,207		
VR106,206	0B07418A	Semi-fixed VR 20K
R113,213	0B05743A	RK 27K 1/4W J
R114,214	0B01888A	RK 10K 1/4W J
R115,215	0B01889A	RK 100K 1/4W J
R116,117	0B05640A	RK 180K 1/4W J
119,216		
217,219		
R118,218	0B01857A	RK 1K 1/4W J
R120,220	0B05675A	RK 3.9K 1/4W J
R121,221	0B05577A	RK 330 1/4W J
R122,222	0B05575A	RK 560 1/4W J
R123,223	0B01854A	RK 39K 1/4W J
R125,225	0B01682A	RK 6.8K 1/4W J
R126,226	0B05936A	RK 10 1/4W J
R138,238	0B01679A	RK 100 1/4W J
R139,239	0B01887A	RK 5.6K 1/4W J
R140,240	0B05560A	RK 18K 1/4W J
R192,292	0B01683A	RK 15K 1/4W J
C110,210	0B01804A	CM 3900P 50V J
C111,211	0B01405A	CE 1μ 50V
C112,212	0B01862A	CE 22μ 16V
C113,213	0B01403A	CE 47μ 16V
C114,214	0B05659A	CM 5600P 50V J
C115,215	0B05652A	CM 4700P 50V J
C116,216	0B01412A	CE 10μ 16V
C117,217	0B05682A	CM 0.068μ 50V J
C118,218	0B09283A	CC 220P 50V K
C150,250	0B09393A	CC 68P 50V J
C161,261	0B09281A	CC 150P 50V K
	— PB Eq. Amp. —	
Q101,102	0B06142A	TR 2SC2240 (BL)
201,202		
Q103,203	0B01872A	TR 2SC945 (L)
ZD301	0B06233A	ZD 10V RD10EB3
L101,201	0B03919B	Inductor 36mH
VR101,201	0B07418A	Semi-fixed VR 20K
R101,201	0B01684A	RK 470K 1/4W J
R102,202	0B09330A	RK 100K 1/4W J (Noiseless)
R103,203	0B01889A	RK 100K 1/4W J
R104,204	0B01706A	RK 47 1/4W J
R105,205	0B05640A	RK 180K 1/4W J
R106,206	0B05622A	RK 2.2K 1/4W J
R107,207	0B05743A	RK 27K 1/4W J
R108,208	0B09830A	RM 4.87K 1/4W F
R109,209	0B09829A	RM 3.32K 1/4W F
R110,210	0B05577A	RK 330 1/4W J
R111,211	0B01887A	RK 5.6K 1/4W J
R112,212	0B09263A	RK 12K 1/4W J
R319	0B01857A	RK 1K 1/4W J
C102,202	0B09137A	CE 22μ 25V (LN)
C103,203	0B09283A	CC 220P 50V K
C104,204	0B01836A	CE 47μ 10V
C105,205	0B01863A	CE 3.3μ 50V
C106,206	0B05832A	CM 0.018μ 50V J
C107,207	0B09281A	CC 150P 50V K
C108,208	0B05687A	CM 1200P 50V J
C307	0B01400A	CE 100μ 16V
CN1	0B02242A	4P-T Post

Schematic Ref. No.	Part No.	Description
	— DC Supply —	
IC401	0B06380A	IC RC7812
Q401,402	0B01872A	TR 2SC945 (L)
ZD401	0B06167A	ZD 6.2V RD6.2EB3
D401	0B06282A	Diode Bridge DBA10
D402,403	0B01909A	SiD 1S1555
R401	0B09883A	RF 560 1W J
R402	0B01889A	RK 100K 1/4W J
R403	0B05560A	RK 18K 1/4W J
R404	0B01887A	RK 5.6K 1/4W J
R405	0B01857A	RK 1K 1/4W J
C401,402	0B09292A	CC 0.1μ 50V Z
C403	0B09799A	CE 4700μ 25V
C404	0B01401A	CE 470μ 25V
C405	0B09798A	CE 6800μ 16V
C406	0B01392A	CE 470μ 16V
C407	0B09251A	CE 33μ 25V
	0B08676A	Heat Sink (1)
	0E00507A	Nut Hex. M3 (1)
	0E00612A	M3x6 ⊕ Pan (2A) (1)
	0E00857A	BT 3x6 ⊕ Binding (2)
	— Bias Osc. —	
Q304	0B06332A	TR 2SB564 (M)
T301	0B06688A	Bias Osc. Unit
R317	0B09263A	RK 12K 1/4W J
R318	0B09831A	RF 22 1W J
R350	0B09837A	RF 10 1W J
C305	0B01403A	CE 47μ 16V
C306	0B09838A	CP 9100P 100V J
CN2	0B02233A	2P-T Post
	— Mute —	
IC301	0B06381A	IC μPD4011BC
Q301	0B06332A	TR 2SB564 (M)
Q302	0B01872A	TR 2SC945 (L)
Q303	0B06155A	TR 2SA733 (P)
D301,302	0B01909A	SiD 1S1555
303,304		
R301,308	0B05509A	RK 33K 1/4W J
311		
R302,312	0B05626A	RK 150K 1/4W J
322		
R303,306	0B01889A	RK 100K 1/4W J
307,309		
310,315		
R304,313	0B01888A	RK 10K 1/4W J
314,321		
R305	0B05627A	RK 330K 1/4W J
R316	0B05776A	RK 1M 1/4W J
C301,304	0B01405A	CE 1μ 50V
C302,303	0B09327A	CE 0.33μ 50V (LN)
RL301	0B07420A	Relay 12V
	— Dolby NR —	
IC101,201	0B06200A	IC μA7300PC
IC102,202	0B06379A	IC LC4066B
D306	0B01909A	SiD 1S1555
R164,264	0B01706A	RK 47 1/4W J
R165,166	0B01889A	RK 100K 1/4W J
175,265		
266,275		
R167,267	0B01857A	RK 1K 1/4W J
R168,268	0B05694A	RK 9.1K 1/4W J
R169,269	0B05629A	RK 2.7K 1/4W J
R170,270	0B01887A	RK 5.6K 1/4W J
R171,271	0B09317A	RM 3.3K 1/4W F
R172,272	0B05641A	RK 47K 1/4W J
R173,273	0B09271A	RK 6.2K 1/4W J
R174,176	0B05620A	RK 270K 1/4W J
274,276		
R177,277	0B09826A	RK 3K 1/4W J
R178,278	0B01888A	RK 10K 1/4W J
331		
R179,279	0B01846A	RK 4.7K 1/4W J
R350,351	0B05508A	RK 56K 1/4W J
C131,132	0B09332A	CE 2.2μ 50V (LN)
231,232		
C133,140	0B09223A	CE 1μ 50V (LN)
233,240		
C134,234	0B09240A	CP 0.033μ 100V G
C135,235	0B01862A	CE 22μ 16V

Schematic Ref. No.	Part No.	Description
C136,236	0B01389A	CE 4.7μ 16V
C137,237	0B05583A	CM 0.033μ 50V J
C138,238	0B01780A	CM 0.1μ 50V J
C139,239	0B09327A	CE 0.33μ 50V (LN)
C141,241	0B01412A	CE 10μ 16V
311		
C142,242	0B01400A	CE 100μ 16V
C143,243	0B05884A	CE 470μ 10V
C162,262	0B05652A	CM 4700P 50V J
C163,263	0B09279A	CC 22P 50V J
	— Meter Amp. —	
IC306	0B06369A	IC TA7612AP
Q105,106	0B01872A	TR 2SC945 (L)
107,205		
206,207		
ZD101,201	0B06384A	ZD 5.5V XZ055
D101,102	0B01909A	SiD 1S1555
103,201		
202,203		
305		
VR108,208	0B07425A	Semi-fixed VR 100K
R141,241	0B05509A	RK 33K 1/4W J
R142,145	0B01889A	RK 100K 1/4W J
146,242		
245,246		
R143,243	0B05784A	RK 560K 1/4W J
R144,244	0B05626A	RK 150K 1/4W J
R147,148	0B05508A	RK 56K 1/4W J
247,248		
R149,249	0B05615A	RK 22K 1/4W J
R320	0B05936A	RK 10 1/4W J
R332-341	0B05505A	RK 1.5K 1/4W J (10)
R342	0B01887A	RK 5.6K 1/4W J
R343	0B01857A	RK 1K 1/4W J
R344	0B09797A	RK 120 1/4W J
R345	0B01888A	RK 10K 1/4W J
C124,224	0B09570A	CE 0.15μ 50V (LN)
C125,225	0B09148A	CE 10μ 25V (LN)
C308	0B01400A	CE 100μ 16V
C312	0B09281A	CC 150P 50V K
	— Headphone/Line Amp. —	
IC302	0B06370A	IC RC4556D
Q108,109	0B06299A	TR 2SC2878
208,209		
R150,153	0B01889A	RK 100K 1/4W J
250,253		
R151,251	0B01682A	RK 6.8K 1/4W J
R152,156	0B01857A	RK 1K 1/4W J
161,252		
256,261		
R157,257	0B09314A	RK 5.1K 1/4W J
R158,258	0B05743A	RK 27K 1/4W J
R159,259	0B05640A	RK 180K 1/4W J
R160,260	0B01713A	RK 33 1/4W J
R162,262	0B05622A	RK 2.2K 1/4W J
R163,263	0B05615A	RK 22K 1/4W J
R345,346	0B05626A	RK 150K 1/4W J
C126,226	0B01405A	CE 1μ 50V
C128,228	0B01403A	CE 47μ 16V
C129,229	0B01400A	CE 100μ 16V
313		
C130,230	0B01412A	CE 10μ 16V
	— Logic —	
IC601	0B06367A	IC TMP4315BP-1811
IC602	0B06214A	IC μPD4071BC
Q601,618	0B06066A	TR 2SD471 (L,M)
Q602,603	0B06371A	TR 2SD1286
Q604,605	0B01872A	TR 2SC945 (L)
619,623		
624,625		
Q606,607	0B06372A	TR 2SA953
612,613		
Q608,609	0B06322A	TR 2SC2002
614,615		
620,621		
Q610,611	0B06013A	TR 2SA733
616,617		
ZD601	0B06268A	ZD 5.6V RD5.6EB3
D601-614	0B01909A	SiD 1S1555 (15)
617,618		
L601	0B06689A	L-C Block BLK

Schematic Ref. No.	Part No.	Description
VR601	0B07421A	Semi-fixed VR 300
R601	0B09803A	R Network 47Kx5
R602	0B09824A	R Network 100Kx3
R603,612 614,649	0B01846A	RK 4.7K 1/4W J
R604,605 606,629	0B01888A	RK 10K 1/4W J
R607,608	0B05625A	RK 220K 1/4W J
R609,643	0B05629A	RK 2.7K 1/4W J
R610,611 648	0B05509A	RK 33K 1/4W J
R613	0B01683A	RK 15K 1/4W J
R615	0B05577A	RK 330 1/4W J
R616,617 618,619 631	0B01857A	RK 1K 1/4W J
R620,621 624,625	0B01684A	RK 470K 1/4W J
R622,623	0B01933A	RK 220 1/4W J
R626,627	0B01679A	RK 100 1/4W J
R628	0B09304A	RK 3.3 1/4W J
R630	0B05698A	RK 1.5K 1/4W J
R632	0B09831A	RF 22 1W J
R633	0B05560A	RK 18K 1/4W J
R634	0B01854A	RK 39K 1/4W J
R635	0B05743A	RK 27K 1/4W J
R636	0B09882A	RK 620 1/4W J
R637	0B01887A	RK 5.6K 1/4W J
R638	0B05645A	RK 270 1/4W J
R639	0B09832A	RF 27 1W J
R640	0B05575A	RK 560 1/4W J
R641	0B09217A	RF 5.6 1/4W J
R642,644	0B01889A	RK 100K 1/4W J
R645	0B05627A	RK 330K 1/4W J
R647	0B05508A	RK 56K 1/4W J
R650	0B01856A	RK 8.2K 1/4W J
R651	0B06706A	RW 3.5
C601	0B01398A	CE 220μ 16V
C602	0B09817A	CE 33μ 10V (LN)
C603,605	0B01405A	CE 1μ 50V
C607	0B01802A	CM 2200P 50V J
CN3	0B02243A	5P-T Post
CN4	0B02245A	9P-T Post
	— Miscellaneous —	
	0B02255B	Main P.C.B.
	0B02249A	PD Wire (1)
	0B02250A	PD Wire (1)
	0B02251A	PD Wire (1)
	0B02254A	PD Wire (1)
	0J04613A	Shield Plate M (1)
	0E00509A	M3x6 ⊕Pan (3)
	0B07435A	Push Switch (1)
	0B07436A	Push Switch (1)

6.10. Main P.C.B. Ass'y

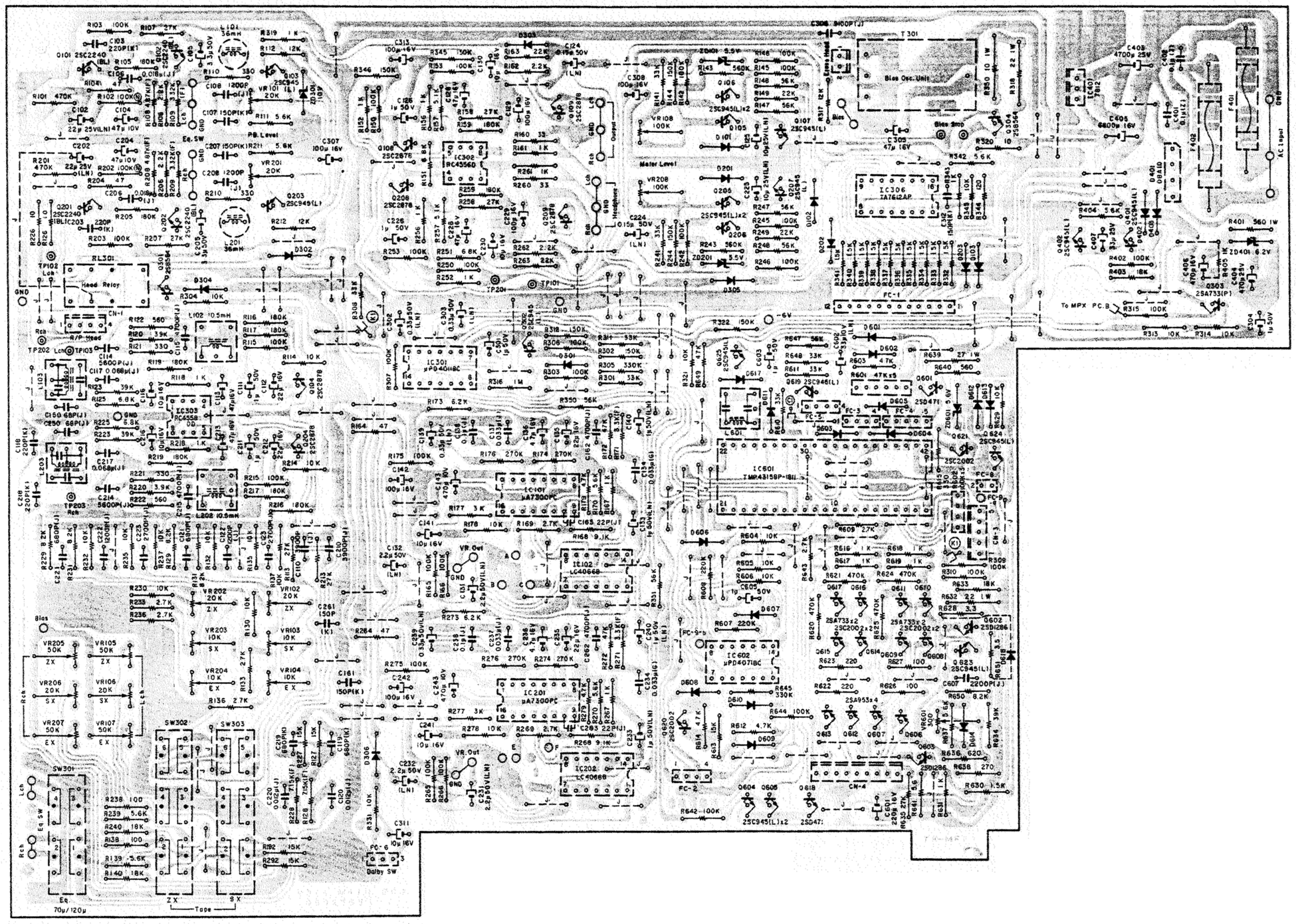

Fig. 6.10.1 2nd Version

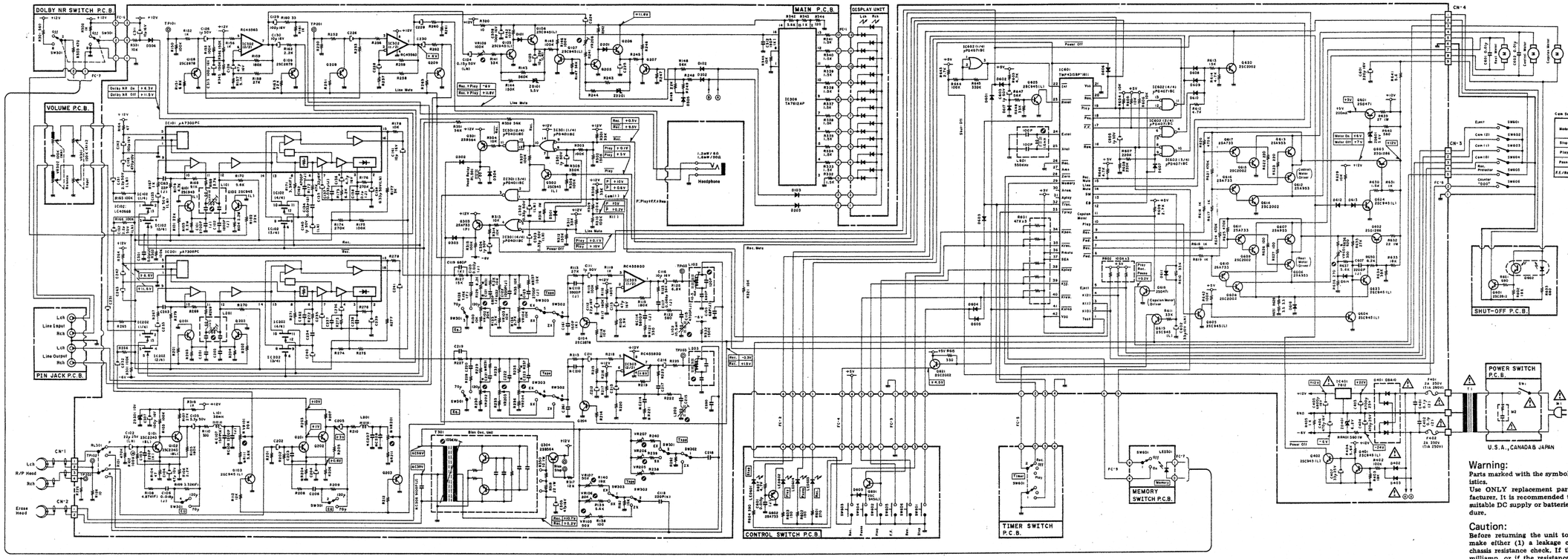
DOLBY NR SWITCH P.C.B.
VOLUME P.C.B.
PIN JACK P.C.B.
MAIN P.C.B.
DISPLAY UNIT
Headphone
CONTROL SWITCH P.C.B.
TIMER SWITCH P.C.B.
MEMORY SWITCH P.C.B.
SHUT-OFF P.C.B.
POWER SWITCH P.C.B.
U.S.A., CANADA & JAPAN
Line Input
Line Output
R/P Head
Erase Head
CN-1
CN-2
CN-4
CN-5
CN-6
CN-7
CN-8
CN-9
Bias Osc. Unit
Bias Osc. Coil
Power Off
Line Mute
Rec. Mute
Play Mute
Rec. Mode
Play Mode
Rec. Pause
Play Pause
Rec. Stop
Play Stop
Rec. Start
Play Start
Rec. Fast Fwd.
Play Fast Fwd.
Rec. Rewind
Play Rewind
Rec. Stop Cancel
Play Stop Cancel
Rec. Start Cancel
Play Start Cancel
Rec. Fast Fwd. Cancel
Play Fast Fwd. Cancel
Rec. Rewind Cancel
Play Rewind Cancel
Rec. Pause Cancel
Play Pause Cancel
Rec. Mute Cancel
Play Mute Cancel
Rec. Mode Cancel
Play Mode Cancel
Rec. Line Mute Cancel
Play Line Mute Cancel
Rec. Power Off Cancel
Play Power Off Cancel
Rec. Timer Cancel
Play Timer Cancel
Rec. Memory Cancel
Play Memory Cancel
Rec. Capstan Motor Cancel
Play Capstan Motor Cancel
Rec. Reel Motor Cancel
Play Reel Motor Cancel
Rec. Pinch Roller Cancel
Play Pinch Roller Cancel
Rec. Erase Cancel
Play Erase Cancel
Rec. Bias Cancel
Play Bias Cancel
Rec. Dolby Cancel
Play Dolby Cancel
Rec. Dolby Cancel
Play Dolby Cancel
Rec. Dolby Cancel
Play Dolby

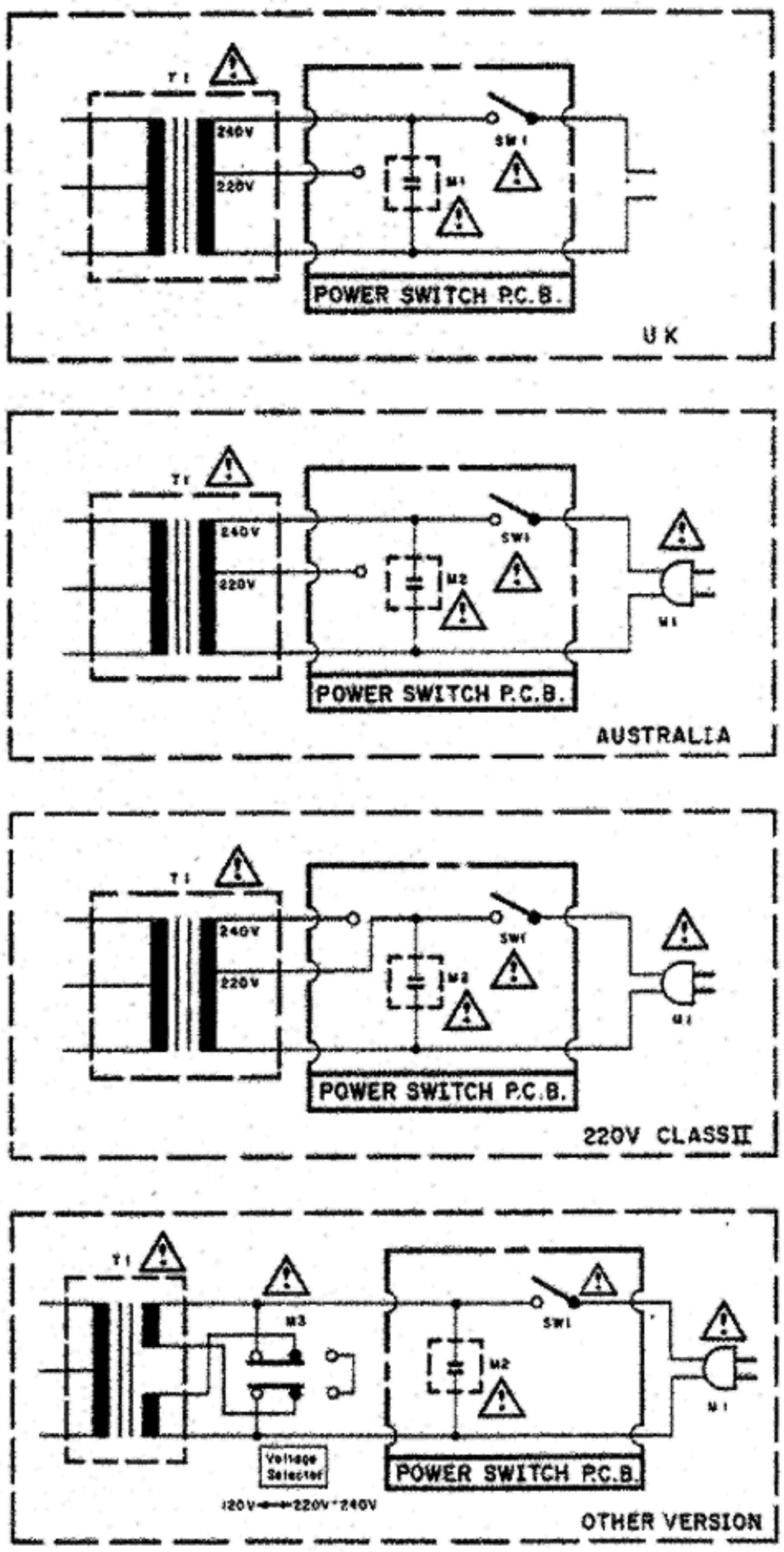

Fig. 7.1.2

7.2. Attention to Servicemen

(1) Parts Replacement

Following parts shall be replaced with the specified ones. Refer to the parts list.

(a) Power Supply Circuit
- Power Cord
- Power Transformer: T1
- Fuses: F401, 402

(b) Power Switch P.C.B. Ass'y
- Power Switch: SW1
- Spark Killer: M2

(c) Main P.C.B. Ass'y
- Power Transistors: Q301, 304, 601, 602, 603, 606, 607, 608, 609, 612, 613, 614, 615, 618, 620, 621
- Diode Bridge: D401
- Relay: RL301
- Fail Safe Type Resistors: R318, 350, 401, 632, 639, 641
- Wire Wound Resistor: R651

(2) Insulation Check

Before returning the repaired BX-1 to a customer, check to insure that the exposed part is accurately insulated from the AC line by measuring the leakage current or the insulation resistance between them.

7.3. IC Block Diagrams

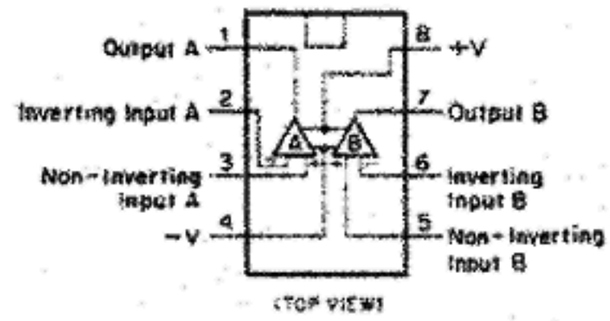

Fig. 7.3.1 Operational Amp. IC 4558, 4556

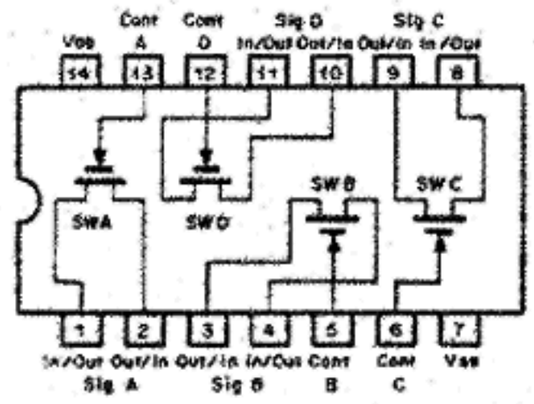

Fig. 7.3.2 Bilateral Switch C-MOS IC LC4066B

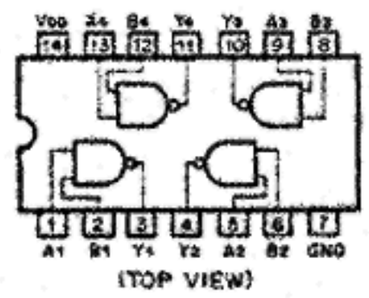

Fig. 7.3.3 NAND Gate C-MOS IC μPD4011BC

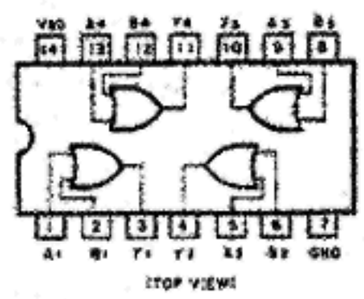

Fig. 7.3.4 OR Gate C-MOS IC μPD4071BC

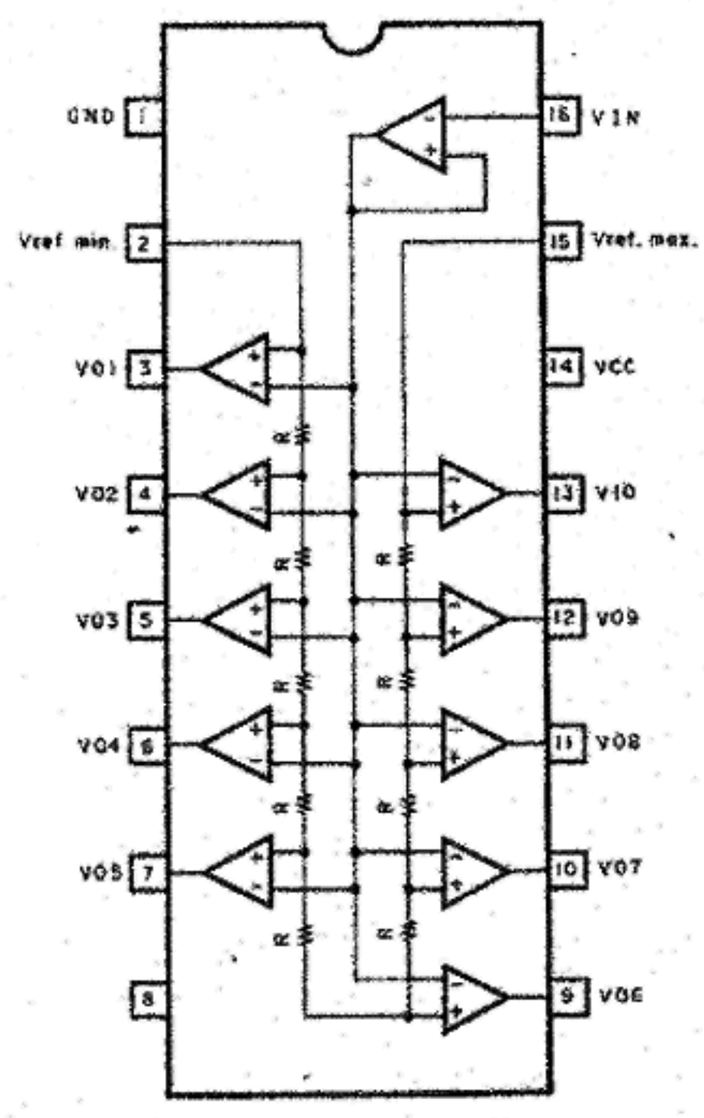

Fig. 7.3.5 Level Meter Driver TA7612AP

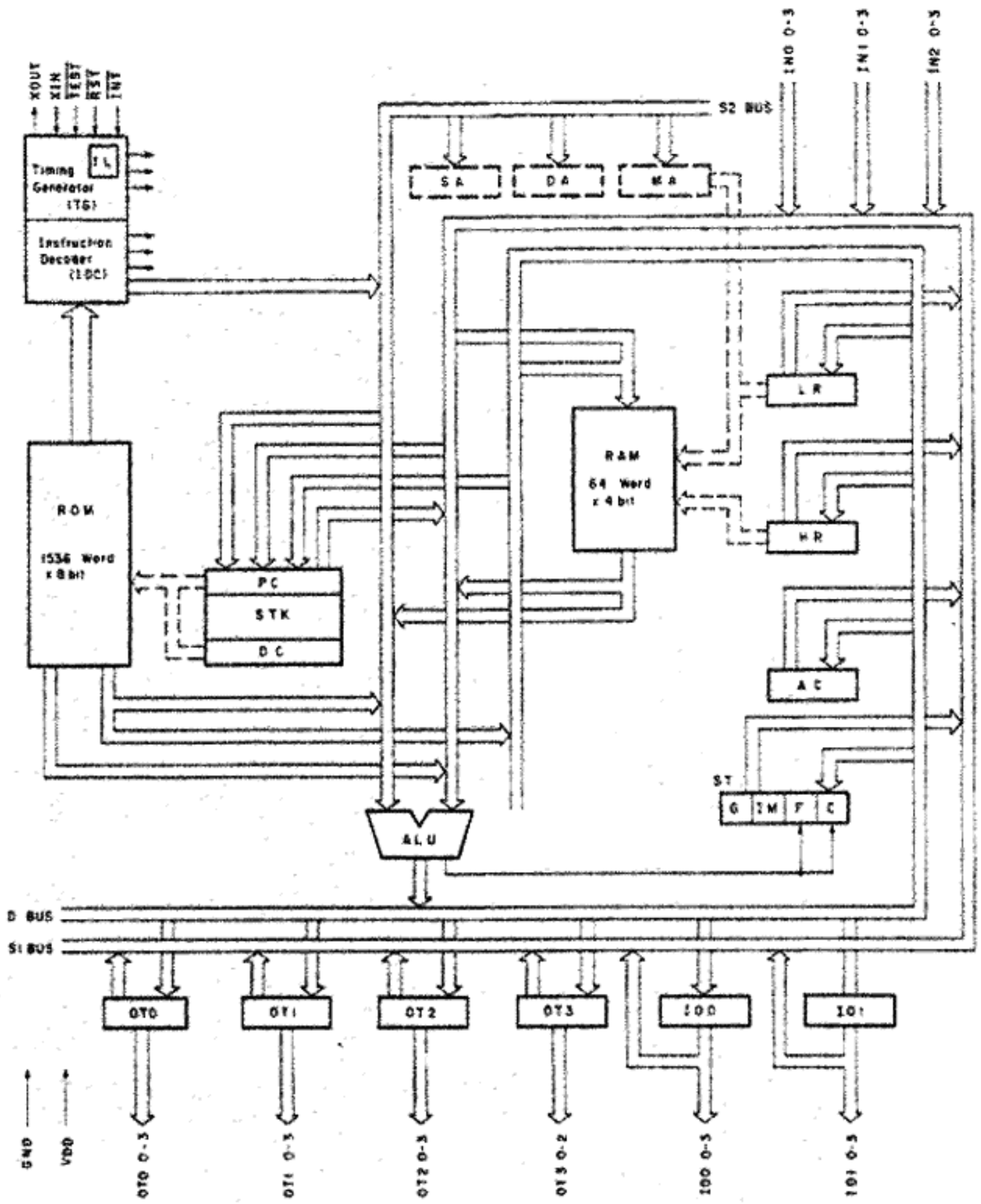

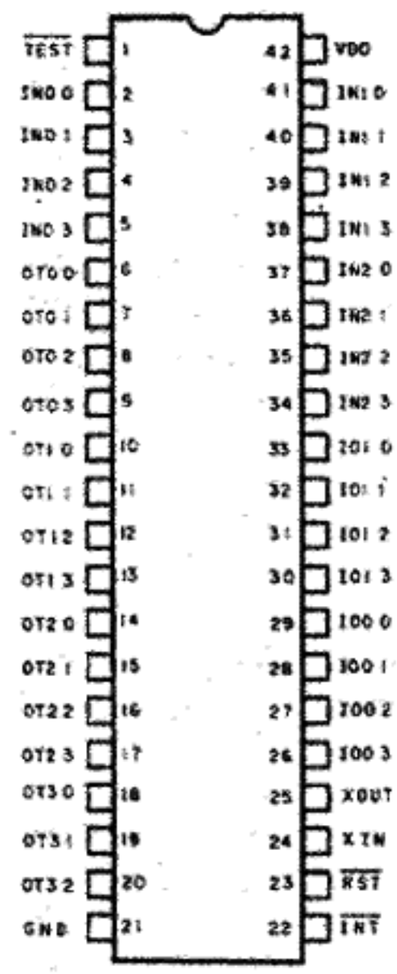

IN0 0 — 3: Input Port IN0
IN1 0 — 3: Input Port IN1
IN2 0 — 3: Input Port IN2
OT0 0 — 3: Output Port OT0
OT1 0 — 3: Output Port OT1
OT2 0 — 3: Output Port OT2
OT3 0 — 2: Output Port OT3
IO0 0 — 3: Bidirectional Port IO0
IO1 0 — 3: Bidirectional Port IO1
RST: Reset
INT: Interrupt
XIN, XOUT: Clock Terminals

Fig. 7.3.6 4-Bit Micro-processor TMP4315BP-1811

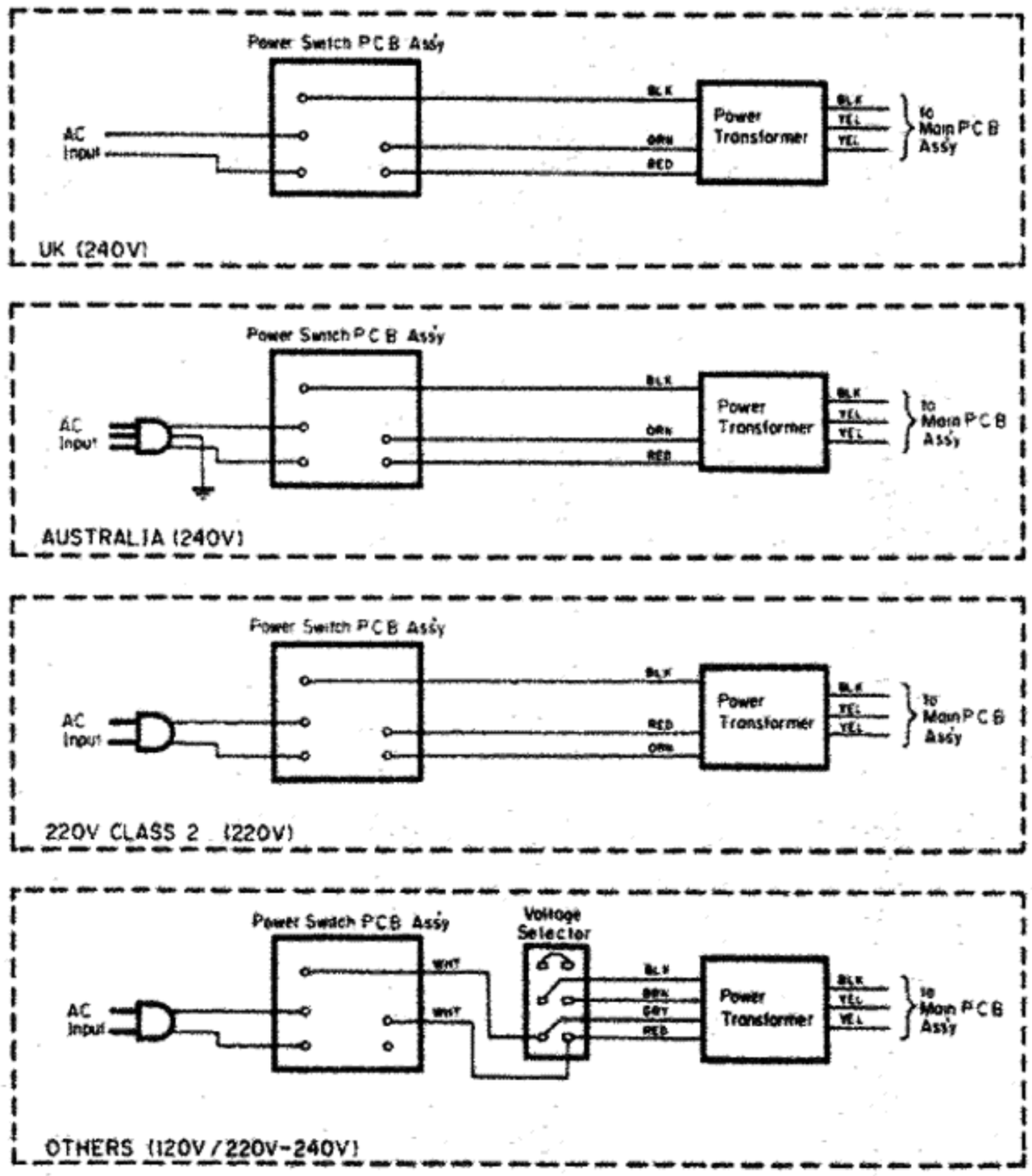

Fig. 8.1

Notes: 1. Table of wire colors

BLK	— Black
BRN	— Brown
RED	— Red
ORN	— Orange
YEL	— Yellow
GRN	— Green
BLU	— Blue
VIO	— Violet
GRY	— Gray
WHT	— White

2. Component side view of the P.C.B. is illustrated unless otherwise specified.

8. WIRING DIAGRAM

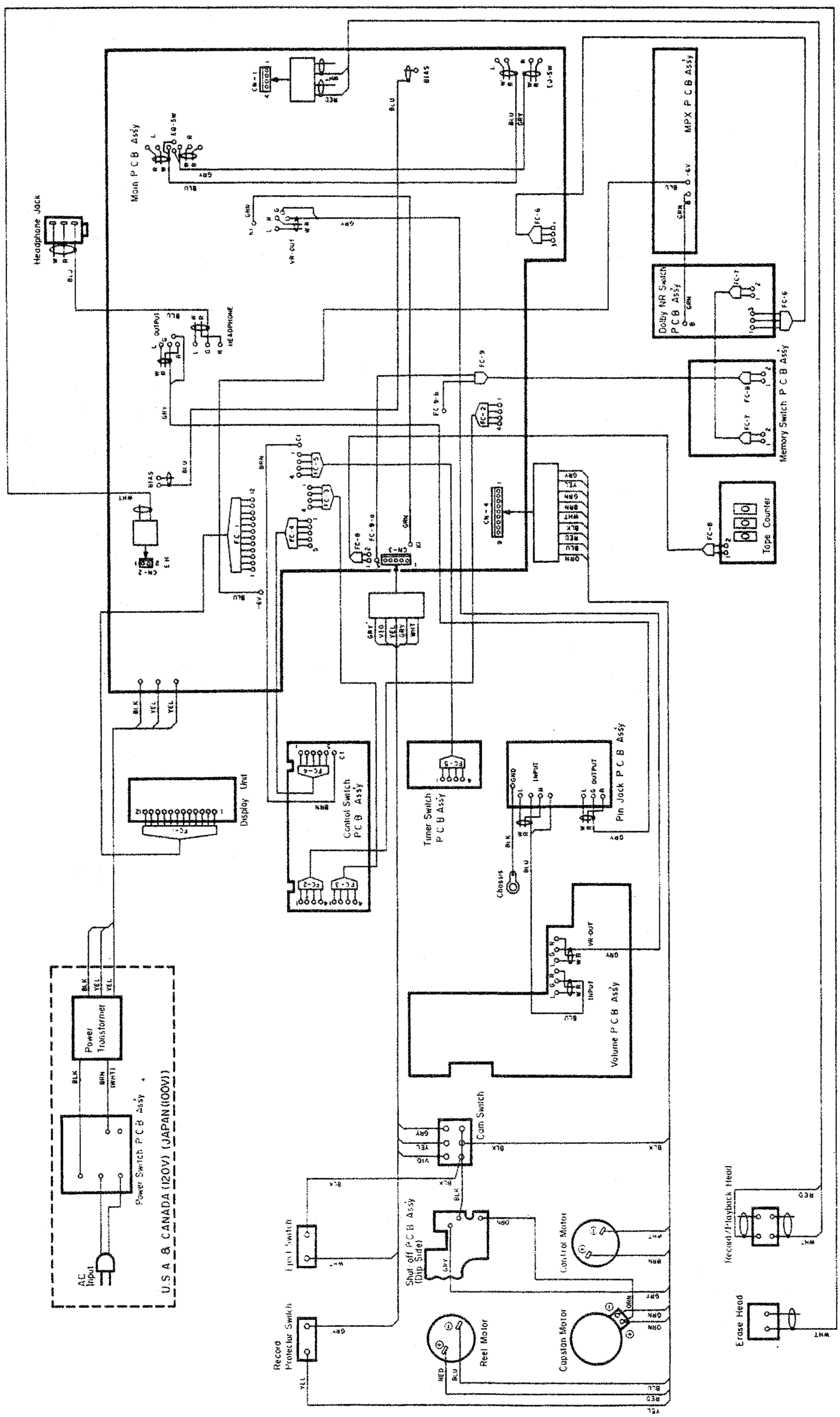

Fig. 8.2

9. TIMING CHART AND EQ. AMP. FREQUENCY RESPONSE

9.1. Timing Chart

(1) Overall Timing Chart

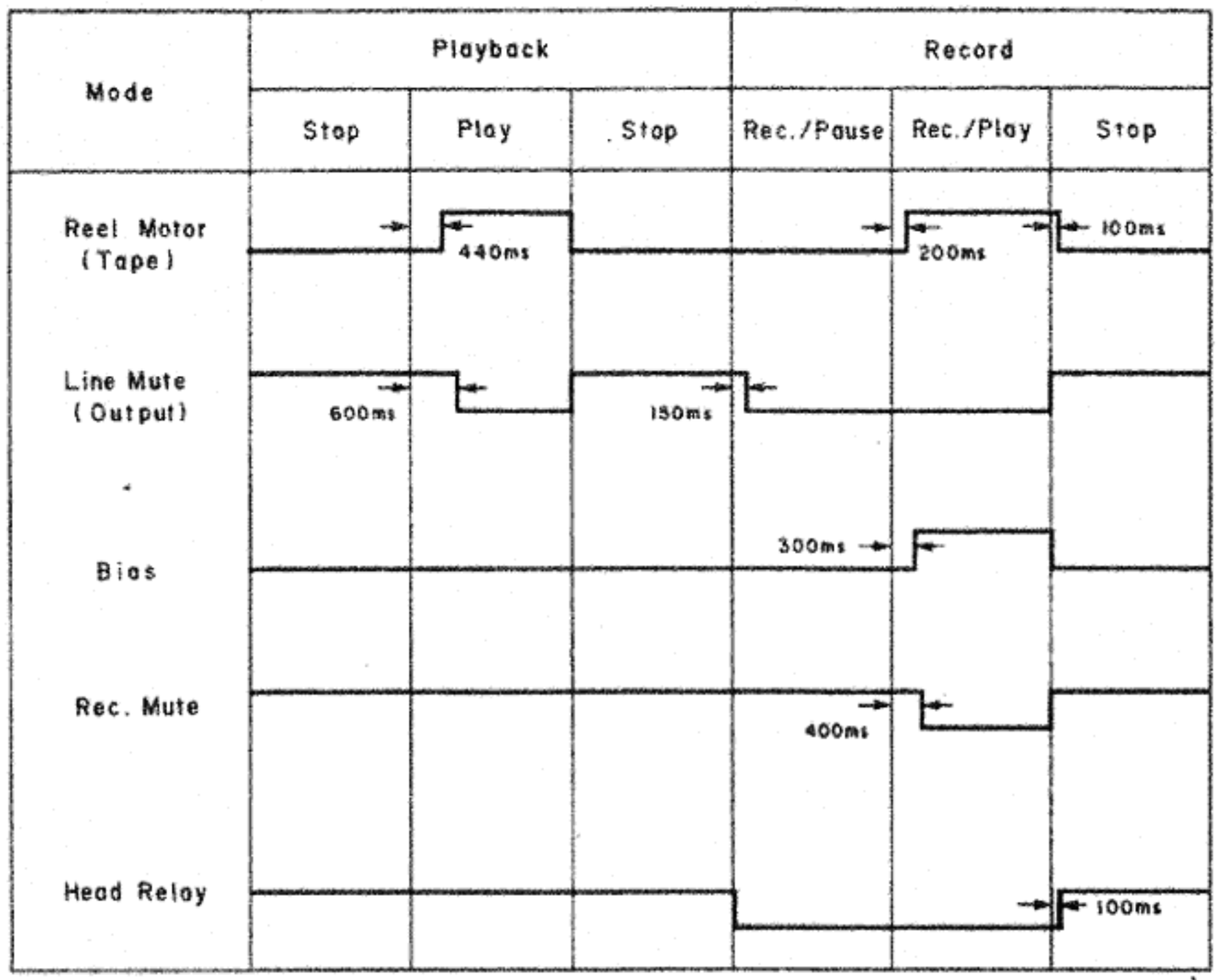

Fig. 9.1.1

(2) Mechanism Control Timing Chart

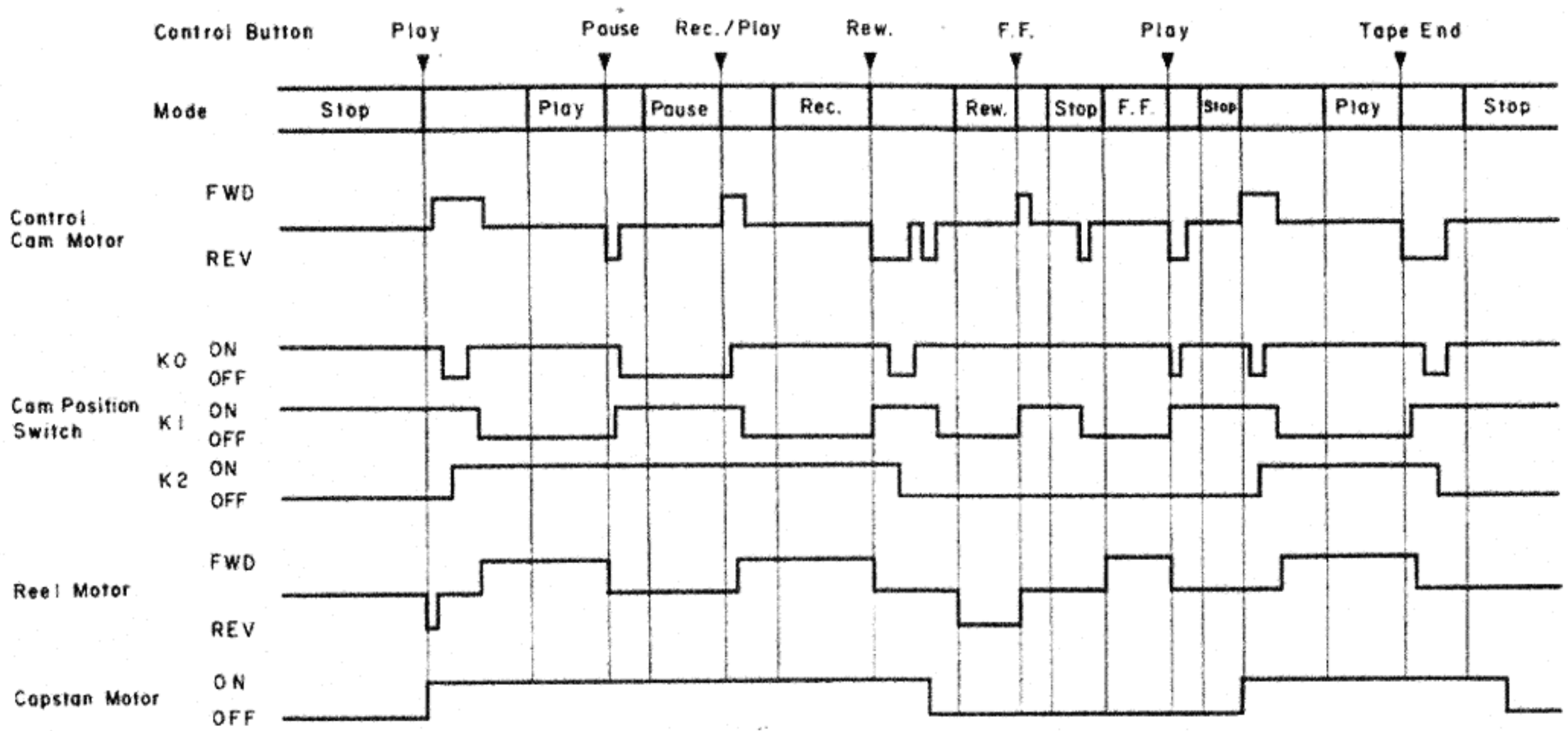

Fig. 9.1.2

9.2. Eq. Amp. Frequency Response

(1) Playback Frequency Response

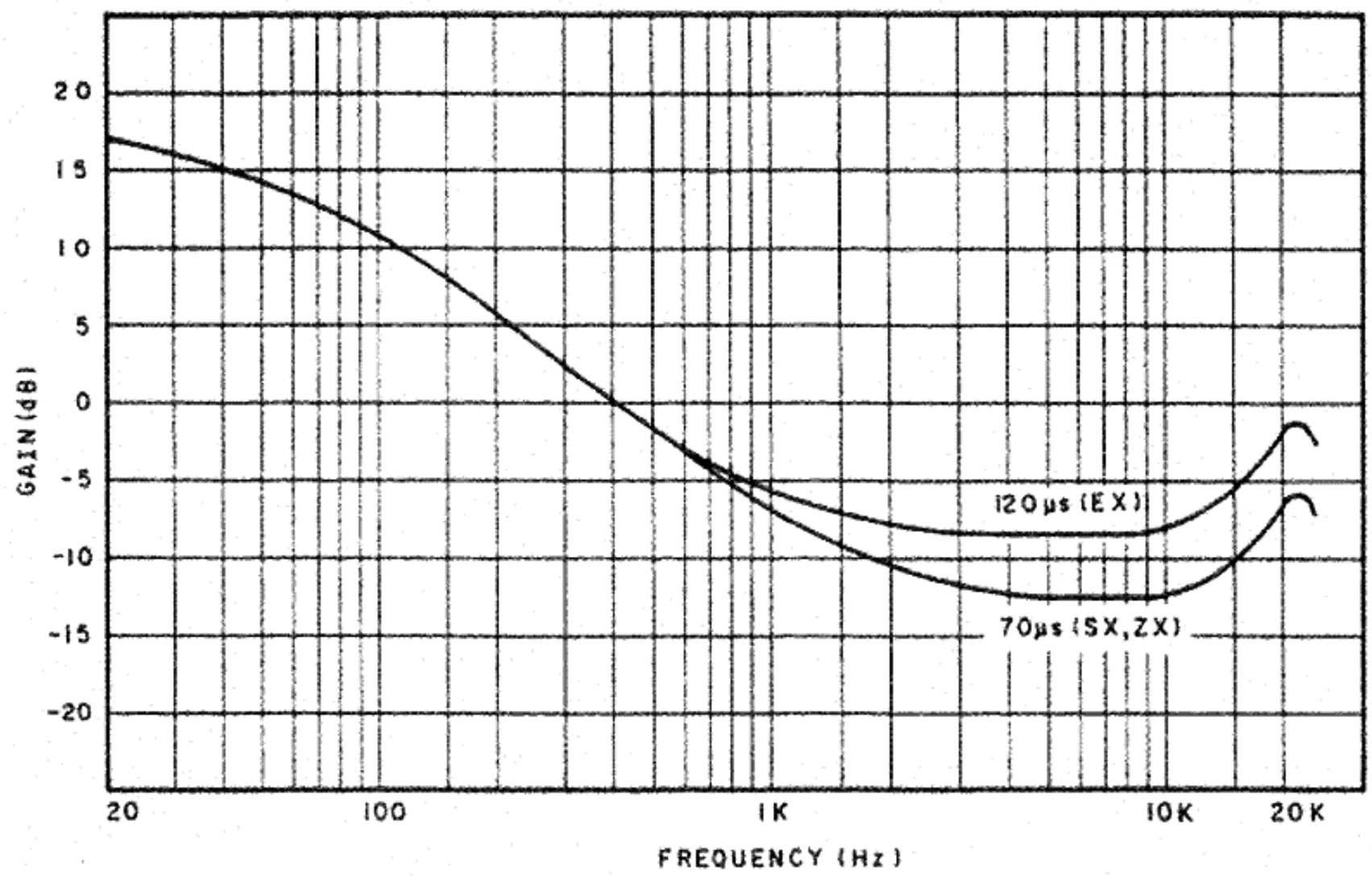

Fig. 9.2.1

(2) Record Current Frequency Response

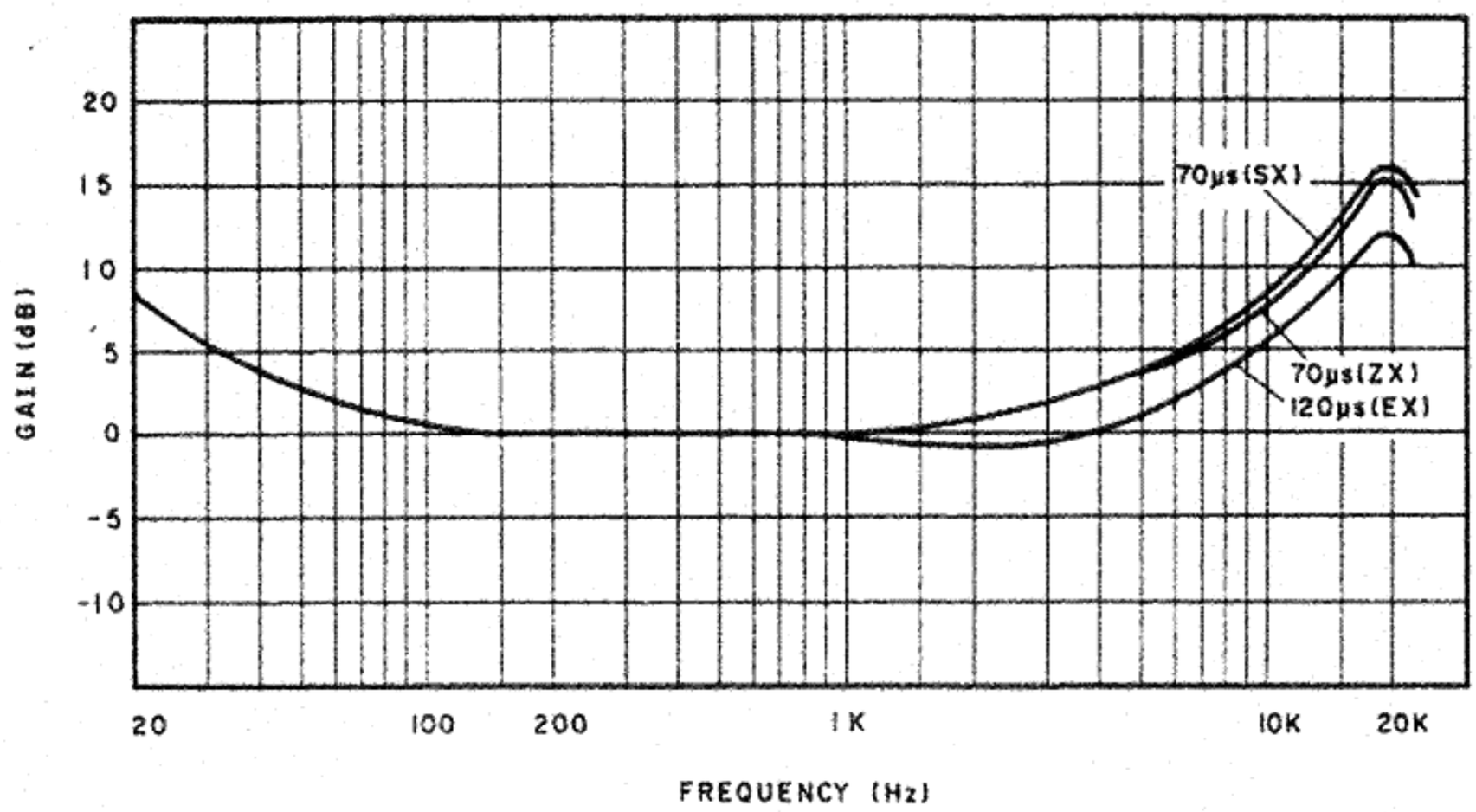

Fig. 9.2.2

10. BLOCK DIAGRAMS

10.1. Amplifier Section

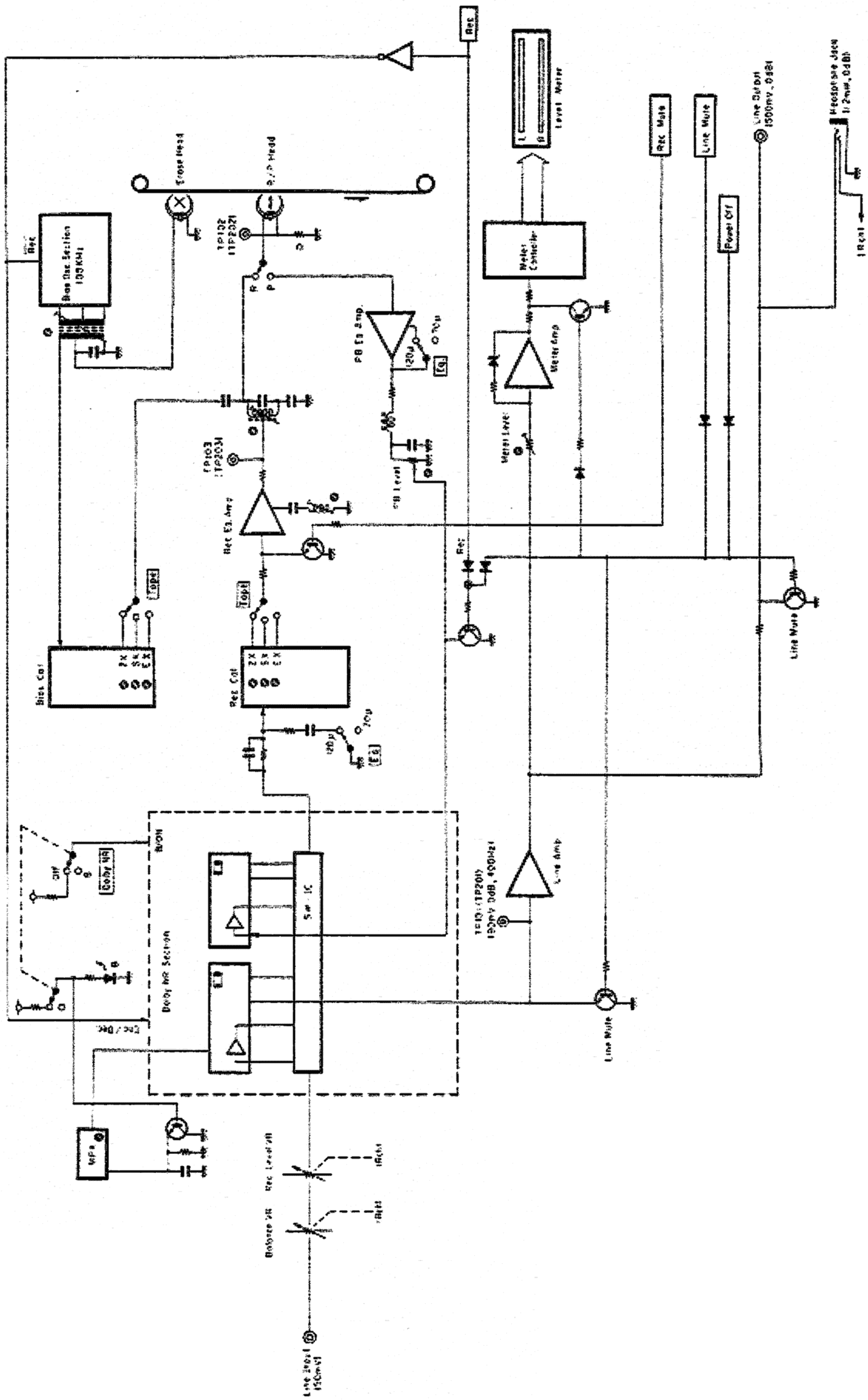

Fig. 10.1

10.2. Mechanism Control Section

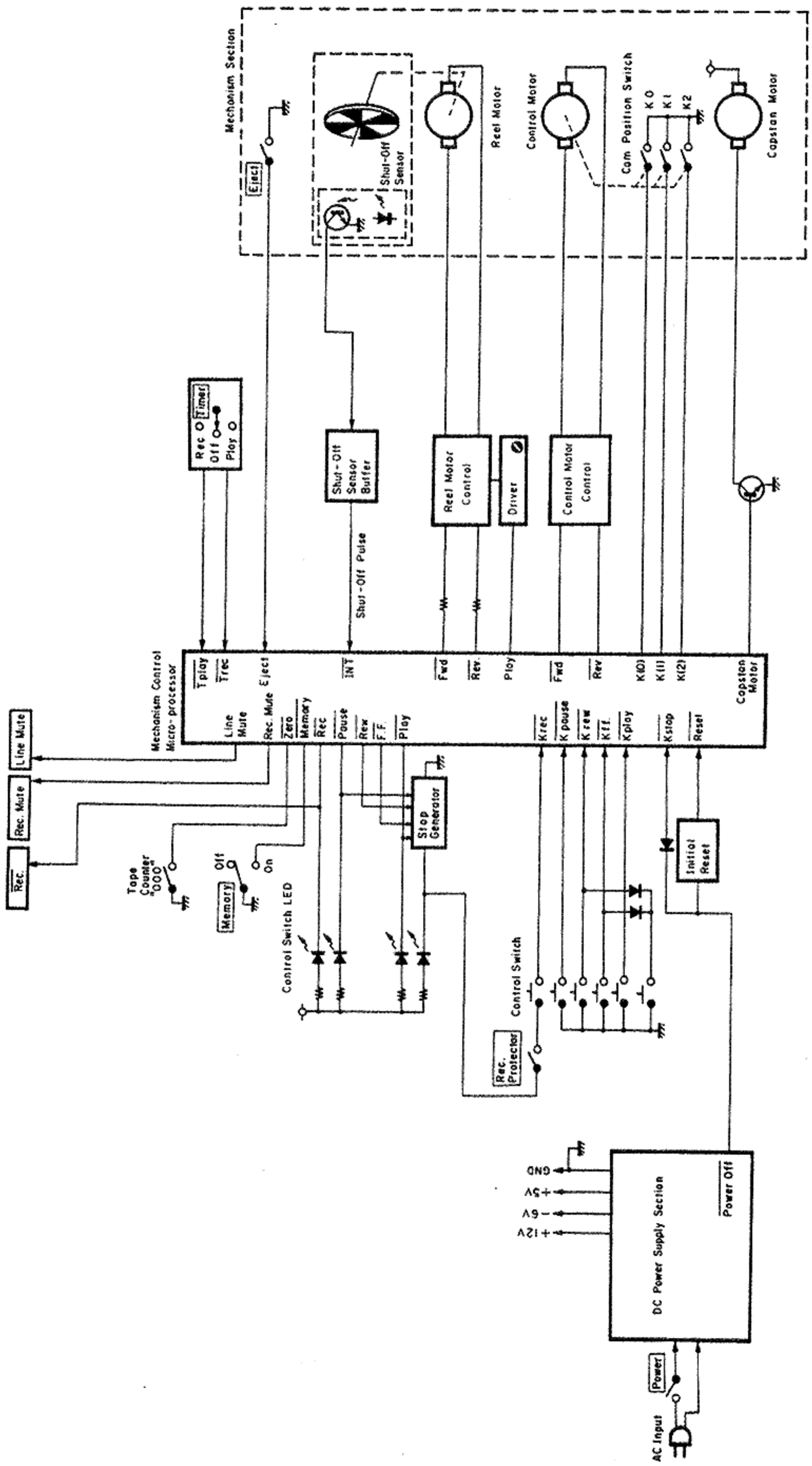

Fig. 10.2

11. SPECIFICATIONS

Track Configuration	4 Tracks/2-Channel Stereo
Heads	2 (Erase Head x 1, Record/Playback Head x 1)
Motors (Tape Transport)	DC Servo Motor (Capstan Drive) x 1 DC Motor (Reel Drive) x 1
Power Source	100, 120, 120/220-240, 220 or 240 V AC; 50/60 Hz (According to country of sale)
Power Consumption	23 W max.
Tape Speed	1-7/8 ips (4.8 cm/sec) ±0.5%
Wow and Flutter	Less than 0.11% Wtd peak Less than 0.06% Wtd rms
Frequency Response	20 Hz—20,000 Hz (recording level —20 dB)
Signal to Noise Ratio	Better than 62 dB (Dolby B-Type NR on, 70 μs, ZX tape, 400 Hz, 3% THD, IHF A-Wtd rms)
Total Harmonic Distortion	Less than 1.0% (400 Hz, 0 dB, ZX, EXII tape) Less than 1.2% (400 Hz, 0 dB, SX tape)
Erasure	Better than 60 dB (100 Hz, 0 dB)
Separation	Better than 36 dB (1 kHz, 0 dB)
Crosstalk	Better than 60 dB (1 kHz, 0 dB)
Bias Frequency	105 kHz
Input (Line)	50 mV, 30 k ohms
Output (Line)	0.5 V (400 Hz, 0 dB) 2.2 k ohms
(Headphones)	1.2 mW (400 Hz, 0 dB) 8-ohm load
Dimensions	430 (W) x 110 (H) x 250 (D) millimeters 16-15/16 (W) x 4-5/16 (H) x 9-7/8 (D) inches
Approximate Weight	5.5 kg 12 lb. 2 oz

- Specifications and appearance design are subject to change for further improvement without notice.
- Dolby NR under license from Dolby Laboratories Licensing Corporation.
- The word "DOLBY" and the Double-D-Symbol are trademarks of Dolby Laboratories Licensing Corporation.